TRIDONIC

enlightening your ideas

LED catalogue
Issue October 2013

+ Examples LED systems
+ LED control gears
+ LED modules
+ luxCONTROL lighting control systems

Tridonic LEDs in systems

Tridonic‘s position in the lighting industry is that of a partner for component solutions and systems. We invest passion and creativity in developing solutions for the future of light. We are familiar with every possible lighting application, we can find the right solutions to meet any requirements. What motivates us is our desire to shape the change of technology towards LED light.

From our comprehensive LED portfolio you can choose individual components or complete systems. We offer modules as sources of extremely high-quality light and flexible control gear for all output categories. The components are perfectly matched to one another and offer a high level of reliability and safety for your applications and projects.

Tridonic TALEXXmodules

LED modules from Tridonic are always state-of-the-art. They contain efficient high-quality LED light sources. For our modules we use both SMD technology (surface mounted device) and chip-on-board technology (COB). SMD-LEDs are mounted directly on a printed circuit board. Our modules for linear and area lighting are based on SMD technology. In the case of chip-on-board technology (COB) the semiconductor chips are attached directly to the board by means of an adhesive with high thermal conductivity. The filling compound protects the LED chip against external mechanical influences and also defines the beam angle. We use COB technology for modules that will be used as point light sources, for example in downlights and spotlights.

Tridonic TALEXXconverter

The LED converters turn economical LED light sources into efficient solutions providing high-quality light. Our new converter portfolio has been designed so this electronic control gear can be used also for next-generation LED modules with even better efficiency. There are three clearly defined series (TALEXXconverter ECO, TOP and TEC) in this full-coverage portfolio so a perfectly matched LED converter is available for every application and every requirement.

Light management

With Tridonic luxCONTROL system products you can create your tailor-made solutions with LED systems – from individual intelligent luminaires through large room installations to extensive lighting concepts for entire buildings. With luxCONTROL you can save energy with daylight-dependent and presence-dependent lighting, control luminaire groups and lighting scenes and create the right atmosphere in any space.

System overview Page 10

LED control gear

Overview
Product overview LED control gear compact Page 12
Product overview LED control gear linear / area Page 13
Product overview LED control gear Page 14
Product / function matrix Page 15

Compact fixed output
TOP series
TALEXconverter LCI 15 W 350/500/700 mA M020 Page 16
TALEXconverter LCI 30 W 700 mA M120 Page 17
TALEXconverter LCCI 16 W Page 18
TALEXconverter LCI 20 W 350mA–900mA TOP C Page 19
TALEXconverter LCI 35 W 350mA–900mA TOP C Page 21
TALEXconverter LCI 35 W 900mA–1750mA TOP C Page 24
TALEXconverter LCI 55 W 900mA–1750mA TOP C Page 27
TALEXconverter LCI 20 W 350mA–900mA TOP SR Page 30
TALEXconverter LCI 35 W 350mA–900mA TOP SR Page 32
TALEXconverter LCI 35 W 900mA–1750mA TOP SR Page 35
TALEXconverter LCI 55 W 900mA–1750mA TOP SR Page 38
TEC series
TALEXconverter LCI 5 W 350 mA IP20 Page 41
TALEXconverter LCI 15 W 350 mA IP20 Page 42
TALEXconverter LCI 15 W 700 mA IP20 Page 43
TALEXconverter LCI 30 W 700 mA IP20 Page 44
TALEXconverter LCI 10 W 350/500/700 mA TEC C Page 45
TALEXconverter LCI 20 W 350/500/700 mA TEC C Page 46
TALEXconverter LCI 35 W 350/500/700/1050 mA TEC C Page 47
TALEXconverter LCI 42 W 900/1050 mA TEC C Page 48
TALEXconverter LCI 60 W 700/1050 mA TEC C Page 49
TALEXconverter LCI 65 W 1400/1750 mA TEC C Page 50
TALEXconverter LCI 10 W 350/500/700 mA TEC SR Page 51
TALEXconverter LCI 20 W 350/500/700 mA TEC SR Page 52
TALEXconverter LCI 35 W 350/500/700/1050 mA TEC SR Page 53
TALEXconverter LCI 42 W 900/1050 mA TEC SR Page 54
TALEXconverter LCI 60 W 700/1050 mA TEC SR Page 55
TALEXconverter LCI 65 W 1400/1750 mA TEC SR Page 56

Compact dimming

ECO series

TALEXconverter 0018 K350 DALI RGB Page 57
TALEXconverter 0030 K500 one4all Page 58
TALEXconverter LCAI 15 W 350 mA one4all Page 59
TALEXconverter LCAI 20 W 500 mA one4all Page 60
TALEXconverter LCAI 30 W 700 mA one4all Page 61
TALEXconverter LCAI 10 W 150mA–400mA ECO C Page 62
TALEXconverter LCAI 10 W 350mA–900mA ECO C Page 64
TALEXconverter LCAI 20 W 350mA–900mA ECO C Page 66
TALEXconverter LCAI 35 W 350mA–900mA ECO C Page 68
TALEXconverter LCAI 35 W 900mA–1750mA ECO C Page 71
TALEXconverter LCAI 55 W 900mA–1750mA ECO C Page 74
TALEXconverter LCAI 20 W 350mA–900mA ECO SR Page 77
TALEXconverter LCAI 35 W 350mA–900mA ECO SR Page 79
TALEXconverter LCAI 35 W 900mA–1750mA ECO SR Page 82
TALEXconverter LCAI 55 W 900mA–1750mA ECO SR Page 85

BASIC series

TALEXconverter LCBI 15 W 350/500/700 mA BASIC phase-cut Ip Page 88
TALEXconverter LCBI 15 W 350/500/700 mA BASIC phase-cut SR Page 89
TALEXconverter LCBU 10W 12V BASIC phase-cut SR Page 90
TALEXconverter LCBU 25W 12V BASIC phase-cut SR Page 91
TALEXconverter LCI 15 W 350/500/700 mA stepDIM Ip Page 92

Linear / area fixed output

TOP series

TALEXconverter LCI 40 W 300 mA I010 Page 94
TALEXconverter LCI 50 W 350 mA I010 Page 95
TALEXconverter LCI 70 W 300 mA I010 Page 96
TALEXconverter LCI 80 W 350 mA I010 Page 97
TALEXconverter LCI 4x16 W 200mA–400mA Ip Page 98

TEC series

TALEXconverter LCI 10 W 350 mA TEC Ip Page 99
TALEXconverter LCI 20 W 350/500/700 mA TEC Ip Page 100
TALEXconverter LCI 35 W 350/500/700/1050 mA TEC Ip Page 101
TALEXconverter LCI 60 W 700/1050 mA TEC Ip Page 102
TALEXconverter LCI 65 W 1400/1750 mA TEC Ip Page 103

Linear / area dimming

ECO series

TALEXcconverter LCAI 20 W 150mA–400mA ECO lp Page 104
TALEXcconverter LCAI 40 W 300 mA I010 one4all Page 106
TALEXcconverter LCAI 50 W 350 mA I010 one4all Page 107
TALEXcconverter LCAI 70 W 300 mA one4all lp Page 108
TALEXcconverter LCAI 80 W 350 mA one4all lp Page 109
TALEXcconverter LCAI 80 W 700 mA one4all lp Page 110

Constant voltage converters

LCU outdoor IP67

TALEXcconverter LCU 15 W 12 V outdoor IP67 Page 111
TALEXcconverter LCU 35 W 12 V outdoor IP67 Page 112
TALEXcconverter LCU 60 W 12/24 V outdoor IP67 Page 113
TALEXcconverter LCU 100 W 12/24 V outdoor IP67 Page 114
TALEXcconverter LCU 150 W 12/24 V outdoor IP67 Page 115

LCU outdoor IP65

TALEXcconverter LED 0010 K301 12/24 V Page 116

LCU indoor IP20

TALEXcconverter 0010 K001 12/24 V Page 117
TALEXcconverter 0025 K201 24 V Page 118
TALEXcconverter 0025 K210 24 V one4all Page 119
TALEXcconverter 0025 K211 24 V Page 120
TALEXcconverter LCU 35 W 12/24 V indoor IP20 Page 121
TALEXcconverter LCU 60 W 12/24 V indoor IP20 Page 122
TALEXcconverter LCU 100 W 12/24 V indoor IP20 Page 123
TALEXcconverter LCU 150 W 12/24 V indoor IP20 Page 124

DC/DC converters

Dimmable

TALEXcontrol C350-2 4-Kanal Page 125
TALEXcontrol C001 Page 126
TALEXcontrol C002 Page 127
TALEXcontrol C003 DALI RGB Page 128
TALEXcontrol C004 Page 129
TALEXcontrol C350 dim Page 130
TALEXcontrol C700 dim Page 131

Fixed output

TALEXcontrol C350-2 12 – 24 V DC / 350 mA 8 VA Page 132
TALEXcontrol C700 12 – 24 V DC / 700 mA 16 VA Page 133

Signage

TALEXcontrol LNU M 12 – 24 V IP67 G1 Page 134
TALEXcontrol LNU S 12 – 24 V IP67 G1 Page 135
TALEXcontrol LNU I IP20 G1 Page 136

LED / OLED Light Engine

Overview

Product overview LED compact Page 137
Product overview LED linear /area Page 139
Product overview OLED Page 140

Setbuilder instruction

TRIDONIC Setbuilder Page 141

LED compakt

STARK DLE

STARK DLE PREMIUM system Page 142
STARK DLE GEN2 CLASSIC Page 146

STARK SLE

STARK SLE PREMIUM system Page 148
STARK SLE GEN2 FOOD Page 154
STARK SLE GEN2 SELECT Page 156
STARK SLE GEN2 COI Page 158
STARK SLE GEN3 FOOD Page 160
STARK SLE GEN3 SELECT Page 162
STARK SLE GEN3 CLASSIC Page 164
STARK SLE GEN3 ART Page 166
STARK SLE GEN3 CLASSIC EM Page 168
STARK SLE GEN3 Mini SELECT Page 170
STARK SLE GEN3 Mini CLASSIC Page 171

STARK CLE

STARK CLE CLASSIC EM Page 172
STARK CLE 160-2200 CLASSIC Page 174
STARK CLE 315-4000 CLASSIC EM Page 175
STARK CLE 360 CLASSIC EM Page 177

STARK FLE

STARK FLE GEN1 Page 179

EOS

RECTANGULAR P440-2 Page 180
STRIP P130-2 Page 181
EOS P211-3 Page 182
EOS P211-4 Page 183
EOS P214-4 Page 185

EMERGENCY

EM-AP 003 Page 186
EM-ER 003 Page 187
EM-ES 08/10/12 Page 188
EM-ES 08/10/12 Mk2 Page 189

LED linear / area

STARK LLE

STARK LLE 35-270-1250 Page 191
STARK LLE 16-280-650 Page 192
STARK LLE 24-280-1250 Page 193
STARK LLE 24-280-1250 EM Page 194
STARK LLE 24-280-650 Page 195
STARK LLE 24-280-2000 Page 196
STARK LLE 24-560-1300 CLASSIC Page 197
STARK LLE 24-560-2400 CLASSIC Page 198

STARK QLE

STARK QLE G2 CLASSIC Page 199
STARK QLE 250 CLASSIC Page 200
STARK QLE CLASSIC EM Page 201
STARK QLE G2 CLASSIC EM Page 202

STARK INDI

STARK INDI CLASSIC Page 203

LED accessories

LENS O211-2 spot lens 10° Page 204
LENS O211-2 diffusion lens Page 205
LENS O214 Page 206

OLED

LUREON REP

LUREON REP 10 Page 207
LUREON REP 10-40 DC/DL 2 Page 208
LUREON REP 20w5-40 DL/DC Page 209

LUREON REM

LUREON REM 10-30 DL Page 210
LUREON REM 15-30 DL Page 211
LUREON REM 29w9-30 DL Page 212

luxCONTROL lighting control system

Overview

Product overview luxCONTROL lighting control systems Page 213

SMART sensors

Ambient light sensor for lighting control

SMART Sensor 5D 19f Page 214

Ambient light sensor and presence detector for lighting control
SMART Sensor 5DP 19f Page 216
SMART Sensor 5DPI 19fe Page 218
SMART Sensor 10DPI 19fe Page 221

SWITCH sensor
Automatic switching based on motion and light level
Smart SWITCH II Page 224
SWITCH Sensor HF 5BP Page 225

basicDIM
Control module for combination with ambient light sensor, momentary-action switch and presence sensor
basicDIM RCL Page 226
basicDIM RCL DBC Page 229
Compact control module with ambient light sensor and motion sensor
basicDIM ILD Page 232
Ambient light sensor and presence detector for constant lighting control
DSI-SMART PTM Page 235
Control module for combination with ambient light sensor, momentary-action switch or motion sensor
smartDIM SM Ip Page 237
Modular lighting control for 3 DSI channels
modularDIM Basic Page 239
Control module for amplifying DSI signals or switch input
DSI-V/T Page 242

comfortDIM
Multi-sensor for DALI system
DALI MSensor 02 Page 243
Control module for 2 DALI groups
DALI GC / DALI GC-A Page 245
Control module for 4 DALI lighting scenes
DALI SC / DALI SC-A Page 246
Control module with 4 freely programmable inputs
DALI MC Page 247
DALI XC Page 248
Operating and control unit
DALI TOUCHPANEL 02 Page 249
Lighting and emergency lighting control system
DALI x/e-touchPANEL 02 Page 250
Sequencer module for DALI systems
DALI SQM Page 251

DALI power supply for installation in switching cabinets
DALI PS Page 252
DALI PS2 Page 253
DALI power supply for installation in switching cabinets and standby function
DALI PS2 standby Page 254
DALI power supply for separate installation
DALI PS1 Page 255
PC interface module for DALI systems
DALI USB Page 256
DALI Interface RS232 PS/S Page 257
Converter for DALI into DSI signals
DALI-DSI Page 258
DALI-DSI II Page 259
Extension of DALI cable length
DALI Repeater Page 260
DALI control module for 3 relays
DALI 3-RM-C Page 261
DALI relay output with 4 independent 10 A switching contacts
DALI-RM/S 4x10 A Page 262
Leading-edge/trailing-edge phase dimmer
DALI PCD 300 one4all Page 263
DALI PCD/S Page 264

DSI actuator
Converter for 1...10 V into DSI signal 1-channel
DSI-A/D Page 265
DSI-AD/S Page 266
Converter for KNX/LON into DSI signals
KNX DSI/S 6CH Page 267
LON DSI/S 6CH Page 268
Leading-edge/trailing-edge phase dimmer 40 – 1,000 VA with preset
DSI-PCD/S Page 269
Relay module for switching ohmic loads
DSI-RK Page 270

Appendix
TRIDONIC's environmental data sheets (EPD) Page 271
TRIDONIC guarantee conditions Page 272
TRIDONIC sales organisation Page 274
Approval marks and symbols Page 279
Standards Page 280

Overview of LED systems

Examples for each luminaire category

Downlight

System solution

Individual components

- 1 x DLE GEN2 CLASSIC
- 1 x LCAI 20W 350–900mA ECO SR

Key facts

- High system efficacy of up to 139 lm/W
- Dimming range from 1 – 100 %
- Plug & Play – automatic luminous flux setting

Spotlight

System solution

Individual components

- 1 x SLE GEN3 CLASSIC
- 1 x LCAI 55W 900–1750mA ECO C

Key facts

- High system efficacy of up to 113 lm/W
- Excellent thermal management & outstanding luminance thanks to COB technology
- Dimming range from 1 – 100 %
- Plug & Play – automatic luminous flux setting

Wall luminaire

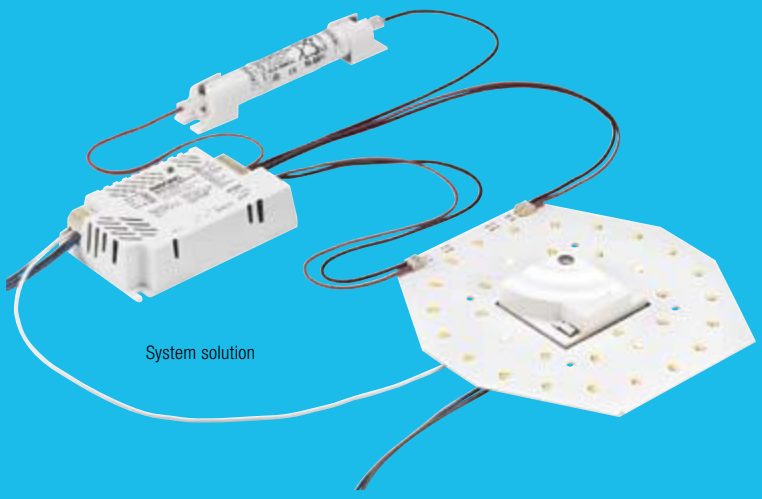

System solution

Individual components

- 1 x CLE CLASSIC EM SO
- 1 x SWITCH Sensor HF 5BP
- 1 x EM powerLED BASIC 15W CLE
- 1 x Accu-NiCd

Key facts

- System consisting of an LED module, control gear with emergency lighting function and SWITCH sensor
- System efficacy of up to 111 lm/W
- Self-cooling (no additional heat sink required)
- With Integrated emergency lighting functionality

Lineare luminaire

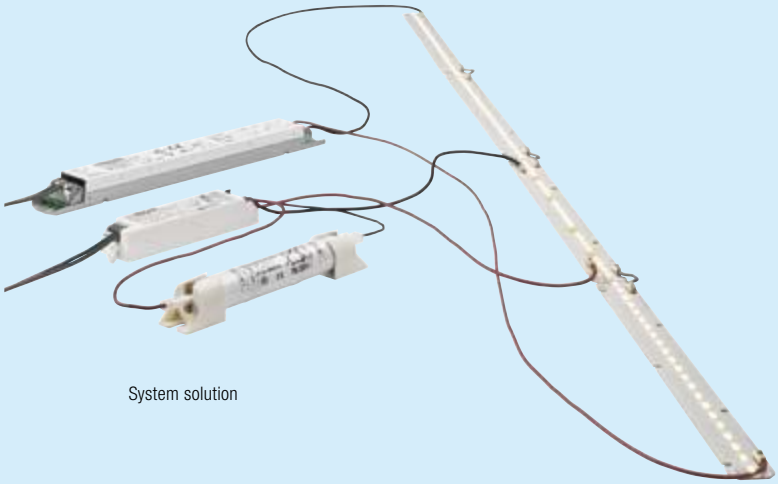

System solution

Individual components
- 3 x LLE
- 1 x LLE EM (emergency lighting function)
- 1 x LCAI 65W 150mA-400mA ECO Ip
- 1 x EM powerLED PRO EZ-3, 4 W (plug fastening)
- 1 x Accu-NiCd

Key facts
- System efficacy of up to 112 lm/W
- Perfectly uniform light even if several LED modules are arranged one after the other
- Dimming range from 1 – 100 %
- Integrated emergency lighting functionality

Wide area luminaire

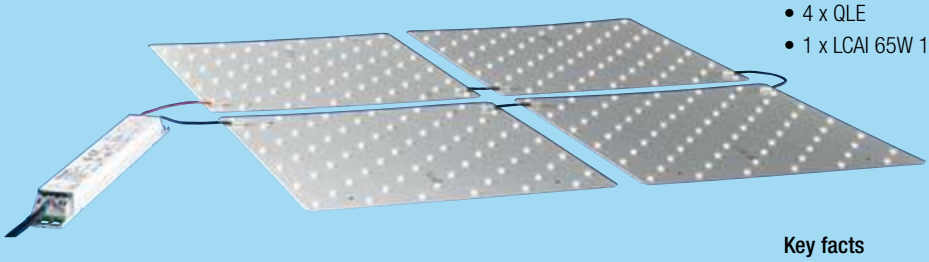

System solution

Individual components
- 4 x QLE
- 1 x LCAI 65W 150mA-400mA ECO Ip

Key facts
- System efficacy of up to 123 lm/W
- Perfectly uniform light even if several LED modules are arranged one after the other
- Self-cooling
- Dimming range from 1 – 100 %
- Integrated emergency lighting functionality

Free standing luminaire

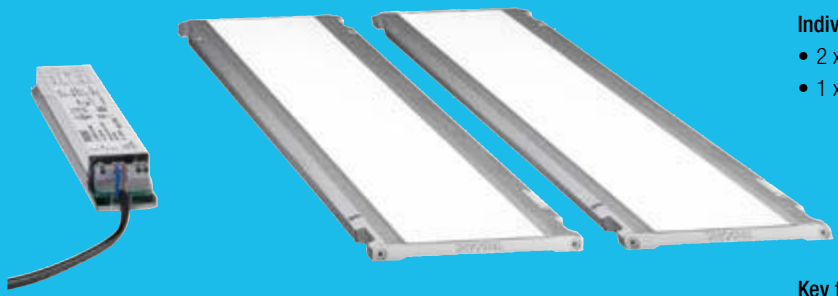

System solution

Individual components
- 2 x INDI CLASSIC
- 1 x LCI 4x16W 200 – 400mA

Key facts
- Direct/indirect distribution of light 80/20 %
- System efficacy of up to 77 lm/W
- Self-cooling
- Slim design

Product overview LED control gear compact

TALEXXconverter ECO series
Compact dimming

The ECO series of LED converters offers extensive dimming plus protection functions. This translates into maximum efficiency for your applications.

- Best dimming quality from 1 – 100 %
- Familiar control via the one4all interface (DALI / DSI)
- Very low standby losses of < 0.2 W

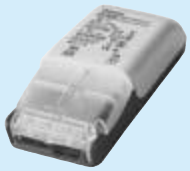

TALEXXconverter BASIC series
Compact dimming

The BASIC series of LED converters offers convenient dimming by means of leading-edge and trailing-edge phase dimmers.

- Specially designed for use in existing systems with dimming (trailing-edge phase dimmers)
- Large dimming range from 5 – 100 %
- Long lifetime of 50,000 h
- Compact dimensions

TALEXXconverter TOP series
Compact fixed output

The TOP series of LED converters offers a fixed output solution for getting the best out of your luminaires.

- Flexible use thanks to adjustable current
- Wide range of applications thanks to a life of 50,000 h across a broad temperature range of -25 to +65 °C
- Intelligent protection functions for safe lamp operation

TALEXXconverter TEC series
Compact fixed output

The TEC series of LED converters offers reliability in its simplest form. These devices focus on the most important functions, offering high quality for your LED products.

- Large portfolio covering 10 – 25 W with currents from 350 – 1,750 mA
- High efficiency of up to 92 %
- Compact dimensions

Product overview LED control gear linear /area

TALEX converter ECO series
Linear / area dimming

The ECO series of LED converters offers extensive dimming plus protection functions. This translates into maximum efficiency for your applications.

- Best dimming quality from 1 – 100 %
- Familiar control via the one4all interface (DALI / DSI)
- Very low standby losses of < 0.2 W

TALEX converter BASIC series
Linear / area dimming

The BASIC series of LED converters offers convenient dimming by means of leading-edge and trailing-edge phase dimmers.

- Specially designed for use in existing systems with dimming (trailing-edge phase dimmers)
- Large dimming range from 5 – 100 %
- Long lifetime of 50,000 h
- Compact dimensions

TALEX converter TOP series
Linear / area fixed output

The TOP series of LED converters offers a fixed output solution for getting the best out of your luminaires.

- Flexible use thanks to adjustable current
- Wide range of applications thanks to a life of 50,000 h across a broad temperature range of -25 to +65 °C
- Intelligent protection functions for safe lamp operation

TALEX converter TEC series
Linear / area fixed output

The TEC series of LED converters offers reliability in its simplest form. These devices focus on the most important functions, offering high quality for your LED products.

- Large portfolio covering 10 – 25 W with currents from 350 – 1,750 mA
- High efficiency of up to 92 %
- Compact dimensions

Product overview LED control gear

TALEXXconverter LCU outdoor IP67
Constant voltage control gear

The LCU LED converters for constant voltage offer reliability and exemplary functionality in outdoor applications.
- High reliability thanks to robust IP67 metal casing
- Long lifetime of 50,000 h
- Large portfolio from 15 – 150 W
- Input voltage range from 108 – 264 V AC
- Complies with EMC requirements for lighting equipment

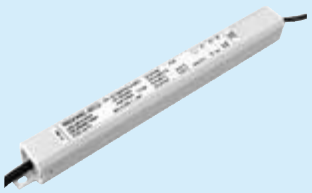

TALEXXconverter LCU outdoor IP65
Constant voltage control gear

The LCU LED converters for constant voltage offer reliability and exemplary functionality in outdoor applications.
- Compact slimline IP65 casing
- Long lifetime of 50,000 h
- Safe operation thanks to short-circuit, overtemperature & overload protection
- Complies with EMC requirements for lighting equipment

TALEXXconverter LCU indoor IP20
Constant voltage control gear

The LCU LED converters for constant voltage offer reliability and exemplary functionality in indoor applications.
- Long lifetime of 50,000 h
- Large portfolio from 35 – 150 W
- Input voltage range from 108 – 264 V AC
- Complies with EMC requirements for lighting equipment

DC/DC converter
Dimming

Dimmable DC/DC constant current converter and PWM booster
- Dimming via DALI, PWM or potentiometer
- 1 – 4 channels
- Up to 95 % efficiency
- Compact dimensions

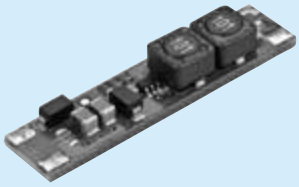

DC/DC converter
Fixed output

DC/DC constant-current converter for centrally supplied LED installations
- 350 and 700 mA output current
- Converts constant voltage into constant current
- Compact dimensions
- Attached with premounted thermally conductive adhesive tape

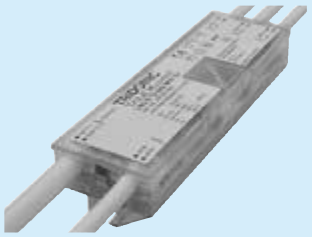

DC/DC converter
Signage

Constant-voltage 3-channel PWM dimmer with adjustable ambient-light-dependent or manual dimming for 12 or 24 V DC LED modules
- Wide range of applications thanks to robust IP67 design across a temperature range of -40 to +60 °C
- Long lifetime of 50,000 h
- Scalable system based on expansion units
- No external light sensor

Product / function matrix

Portfolio		Dimming	Fixed output	
		ECO Leader in efficiency and versatility	**TOP** Optimum performance and high flexibility	**TEC** Reliable and straightforward
Dimming	Amplitude + PWM dimming	yes		
	PWM frequency	500 Hz		
	Lowest Dim-Level	1 %		
	DALI DT6	yes		
	DSI	yes		
	switchDIM	yes		
	corridorFUNCTION	yes		
DC operation	Supporting EN 50172	yes	yes	
	DC level fixed		yes	
	DC level adjustable	yes		
Output current	Adjustable	yes	yes	
	Via resistor or plug	yes	yes	
	Via DALI	yes		
	Current resolution	1/25/50 mA [1]	25/50 mA [1]	
	Current tolerances	±3 %	± 5 %	± 7.5 %
Functions & Performance	Constant light output over lifetime	yes		
	Intelligent Temperature Guard	yes	yes	yes
	Intelligent Temperature Management	yes	yes [3]	
	Standby losses	< 0.2 W		
	Input voltage range	220 – 240 V	220 – 240 V	220 – 240 V
	Lifetime @ T_a max.	50,000 h	50,000 h	30,000 h
	T_a range	-25 up to +60 °C [2]	-25 up to +60 °C [2]	-20 up to +50 °C

[1] Depending on the output current range and setting method (I-Select or DALI).
[2] Varies with the selected output power. Detailed values can be found in data sheet.
[3] For control gears with 35 W and more.

IP67 SELV RoHS

TALEXconverter LCI 15 W 350/500/700 mA M020

TOP series

Product description

- Independent LED control gear for LED modules
- Constant current LED control gear for outdoor usage ①
- Output power 15 W
- Nominal life of 50,000 h (at ta 55 °C with a failure rate ≤ 0.2 % per 1,000 h)
- 5-year guarantee

Properties

- Strain relief connection cable 0.5 m
- Type of protection IP67
- Casing: polycarbonate, white (UV resistant)

Functions

- Overload protection by reduction of performance
- Overtemperature protection
- Short-circuit shutdown

→ For product data sheet go to www.tridonic.com, or available on request

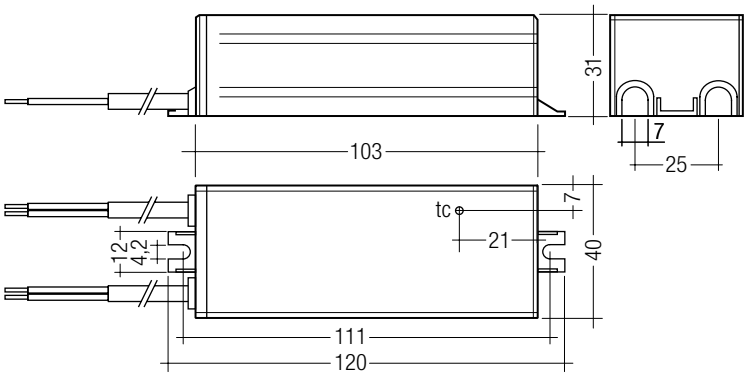

Technical data

Rated supply voltage	220 – 240 V AC
AC voltage range	198 – 264 V AC
Mains frequency	50 / 60 Hz
Typ. rated current (at 230 V, 50 Hz, full load)	0.15 A
Max. input power	18 W
Typ. input power in no-load operation	0.5 W
Typ. λ (at 230 V, 50 Hz, full load)	> 0.5 C
Typ. efficiency (at 230 V, 50 Hz, full load)	> 85 %
Turn on time (at 230 V, 50 Hz, full load)	0.5 s
Turn off time (at 230 V, 50 Hz, full load)	1 s
Hold on time ②	20 ms
ta operating (at lifetime 50,000 h)	-25 ... +55 °C
Max. casing temperature tc	75 °C
Dimensions L x W x H	120 x 40 x 31 mm
Hole spacing D	111 mm

Ordering data

Type	Article number	Packaging, carton	Packaging, pallet	Weight per pc.
LCI 015/0350 M020	**86459179**	10 pc(s).	600 pc(s).	0.248 kg
LCI 015/0500 M020	**86459180**	10 pc(s).	600 pc(s).	0.248 kg
LCI 015/0700 M020	**86459181**	10 pc(s).	600 pc(s).	0.248 kg

→

Product matrix, page 15

For standards see data sheet

Specific technical data

Type	Typ. output current	Output current tolerance	Output current ripple	Max. output current peak	Output voltage range	Max. output voltage ③	Typ. output power
LCI 015/0350 M020	350 mA	± 5 %	± 15 %	418 mA	3 – 43 V	52 V	15 W
LCI 015/0500 M020	500 mA	± 5 %	± 10 %	575 mA	3 – 35 V	36 V	15 W
LCI 015/0700 M020	700 mA	± 5 %	± 10 %	805 mA	3 – 25 V	26 V	15 W

① Not suitable for outdoor ground recessed luminaires according to EN 60598-2-13, 13.10.
② At power failure.
③ In no-load operation. No shutdown in no-load operation.

IP67 SELV RoHS

TALEXconverter LCI 30 W 700 mA M120

TOP series

Product description

- Independent LED control gear for LED modules
- Constant current LED control gear for outdoor usage ①
- Output power 30 W
- Nominal life of 50,000 h (at ta 55 °C with a failure rate ≤ 0.2 % per 1,000 h)
- 5-year guarantee

Properties

- Strain relief connection cable 0.5 m
- Type of protection IP67
- Casing: polycarbonate, white (UV resistant)

Functions

- Overtemperature protection

→ For product data sheet go to www.tridonic.com, or available on request

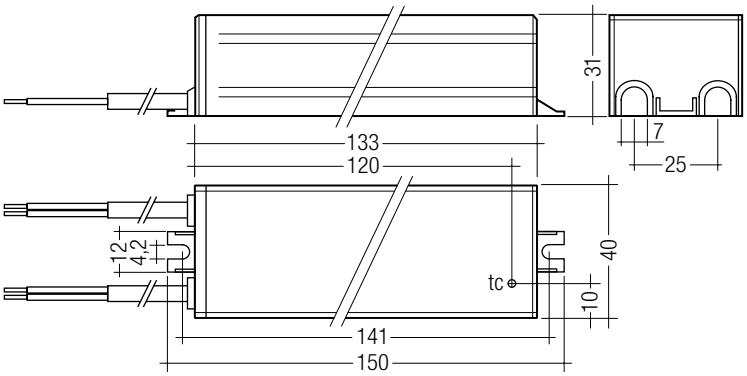

Technical data

Rated supply voltage	220 – 240 V AC
AC voltage range	198 – 264 V AC
Mains frequency	50 / 60 Hz
Typ. rated current (at 230 V, 50 Hz, full load)	0.155 A
Max. input power	37.5 W
Typ. input power in no-load operation	1.5 W
Typ. λ (at 230 V, 50 Hz, full load)	0.95
Typ. efficiency (at 230 V, 50 Hz, full load)	> 85 %
Turn on time (at 230 V, 50 Hz, full load)	0.5 s
Turn off time (at 230 V, 50 Hz, full load)	1 s
Hold on time ②	40 ms
ta operating (at lifetime 50,000 h)	-25 ... +55 °C
Max. casing temperature tc	85 °C
Dimensions L x W x H	150 x 40 x 31 mm
Hole spacing D	141 mm

Ordering data

Type	Article number	Packaging, carton	Packaging, pallet	Weight per pc.
LCI 030/0700 M120	**86459178**	10 pc(s).	600 pc(s).	0.309 kg

→

Product matrix, page 15

For standards see data sheet

Specific technical data

Type	Typ. output current	Output current tolerance	Output current ripple	Max. output current peak	Output voltage range	Max. output voltage ③	Typ. output power
LCI 030/0700 M120	700 mA	± 5 %	± 20 %	875 mA	9 – 46 V	58 V	30 W

① LED control gear mains cable not suitable as luminaire mains cable for ground installation lights according to EN 60598-2-13.
② At power failure.
③ In no-load operation. No shutdown in no-load operation.

IP20 RoHS

TALEXconverter LCCI 16 W

TOP series

Product description

- 350, 500 or 700 mA output signal
- Over temperature protection with current back control
- Cage clamp terminals for rigid and flexible wires
- Double assignment of the terminal possible
- Rapid installation of cable clamp and terminal cover, no tool required
- Connecting cable, cable cross-section 0.5 – 2.5 mm²
- Output power 16 W
- Protection class II, SELV
- Type of protection IP20
- LED control gear for individual luminaires
- Nominal life time up to 50,000 h (at ta 55 °C with a failure rate ≤ 0.2 % per 1,000 h)
- 5-year guarantee

Properties

- Casing: polycarbonate, black
- Large connection compartment
- Adjustable output current by means of a potentiometer or resistor
- Compact dimensions

→ For product data sheet go to www.tridonic.com, or available on request

Technical data

Rated supply voltage	220 – 240 V
Input voltage, AC	198 – 264 V
Rated current (at 230 V, 50 Hz)	0.15 A
Mains frequency	50 / 60 Hz
λ	> 0.5 C
Efficiency at full load	> 85 %
Max. input power	20 W
Potentiometer ① ②	100 kΩ, linear
Output power	16 W
Output power range	1 – 16 W
Start time	< 100 ms
Ambient temperature ta	-25 ... +55 °C
Max. casing temperature tc	75 °C
Dimensions L x W x H	101.5 x 51 x 29.5 mm

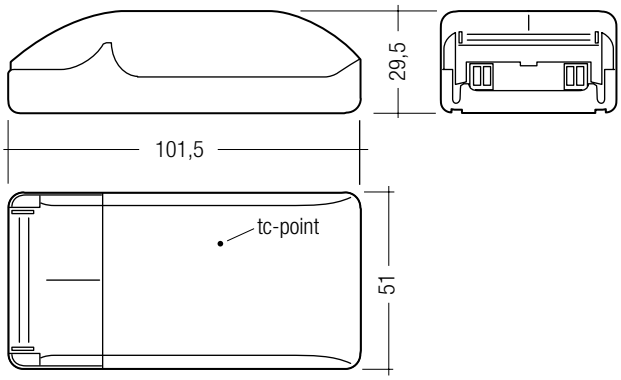

Ordering data

Type	Article number	Packaging, carton	Packaging, pallet	Weight per pc.
LCCI 016/0350 B020	**86459210**	24 pc(s).	1,200 pc(s).	0.08 kg
LCCI 016/0500 B020	**86459211**	24 pc(s).	1,200 pc(s).	0.08 kg
LCCI 016/0700 B020	**86459212**	24 pc(s).	1,200 pc(s).	0.08 kg

→ **Product matrix**, page 15

For standards see data sheet

Specific technical data

Type ①	Output current range ②	Output voltage range
LCCI 016/0350 B020	70 – 350 mA	3 – 48 V
LCCI 016/0500 B020	100 – 500 mA	3 – 33 V
LCCI 016/0700 B020	140 – 700 mA	3 – 24 V

① Each LED control gear must be adjusted by a separate potentiometer. It is not allowed to adjust more than one LED control gear by one potentiometer.
② Further information see on data sheet.

IP20 SELV EL RoHS

NEW

TALEXconverter LCI 20 W 350mA–900mA TOP C

TOP series

Product description

- Fixed output built-in LED control gear
- Constant current LED control gear
- Output current adjustable between 350 – 900 mA
- Max. output power 20 W
- Nominal life time up to 50,000 h (at ta 55 °C with a failure rate ≤ 0.2 % per 1,000 h)
- For luminaires of protection class I and protection class II
- Temperature protection as per EN 61347-2-13 C5e
- 5-year guarantee

Properties

- Casing: polycarbonate, white
- Type of protection IP20

Functions

- Intelligent Temperature Guard (overtemperature protection)
- Short-circuit protection
- Overload protection
- Suitable for emergency lighting units acc. to EN 50172

→ For product data sheet go to www.tridonic.com, or available on request

→

Product matrix, page 15

For standards see data sheet

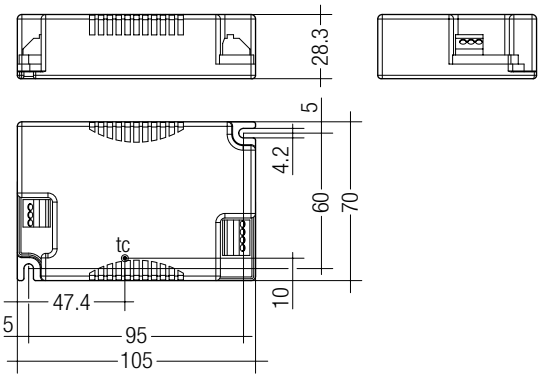

Technical data

Rated supply voltage	220 – 240 V
Input voltage, AC	198 – 264 V
Input voltage range, DC	176 – 280 V (start ≥ 198 V DC)
Mains frequency	0 / 50 / 60 Hz
Leakage current (PE)	< 0.5 mA
Max. input power	24.7 W
Efficiency (at 230 V, 50 Hz, full load)	81 – 85.5 %
THD (at 230 V, 50 Hz, full load)	10 %
Output current tolerance	± 5 %
Output current ripple	± 15 %
Max. output current peak	Output current + 20 %
Max. output voltage (no-load voltage)	60 V
Time to light (at 230 V, 50 Hz, full load)	< 0.5 s
Hold on time at power failure or shutdown	1 s
Switchover time (AC/DC)	< 0.5 s
Dimensions L x W x H	105 x 70 x 28.3 mm

Ordering data

Type	Article number	Packaging, carton	Packaging, pallet	Weight per pc.
LCI 20W 350mA-900mA TOP C	**28000191**	10 pc(s).	960 pc(s).	0.118 kg

Specific technical data

Type	Output current	Min. output voltage	Max. output voltage	Max. output power	Input power (at 230 V, 50 Hz, full load)	Input current (at 230 V, 50 Hz, full load)	λ (at 230 V, 50 Hz, full load)	tc point max.	Ambient temperature ta	tc/ta for ≥ 50,000 h	I-select resistor value
LCI 20W 350mA-900mA TOP C	350 mA	22 V	48.0 V	16.8 W	19.6 W	93 mA	0.92	80 °C	-25 ... 65 °C	76/60 °C	open
LCI 20W 350mA-900mA TOP C	400 mA	22 V	48.0 V	19.2 W	23.3 W	108 mA	0.94	80 °C	-25 ... 65 °C	76/60 °C	66.50 kΩ
LCI 20W 350mA-900mA TOP C	450 mA	20 V	44.4 V	20.0 W	23.4 W	108 mA	0.94	80 °C	-25 ... 65 °C	76/60 °C	57.60 kΩ
LCI 20W 350mA-900mA TOP C	500 mA	18 V	40.0 V	20.0 W	23.5 W	109 mA	0.94	80 °C	-25 ... 65 °C	76/60 °C	49.90 kΩ
LCI 20W 350mA-900mA TOP C	550 mA	16 V	36.4 V	20.0 W	23.7 W	110 mA	0.94	80 °C	-25 ... 65 °C	76/60 °C	42.20 kΩ
LCI 20W 350mA-900mA TOP C	600 mA	15 V	33.3 V	20.0 W	23.8 W	110 mA	0.94	80 °C	-25 ... 65 °C	76/60 °C	35.70 kΩ
LCI 20W 350mA-900mA TOP C	650 mA	14 V	30.8 V	20.0 W	23.9 W	111 mA	0.94	80 °C	-25 ... 60 °C	74/55 °C	28.70 kΩ
LCI 20W 350mA-900mA TOP C	700 mA	13 V	28.6 V	20.0 W	24.0 W	111 mA	0.94	80 °C	-25 ... 60 °C	74/55 °C	22.00 kΩ
LCI 20W 350mA-900mA TOP C	750 mA	12 V	26.7 V	20.0 W	24.1 W	111 mA	0.94	80 °C	-25 ... 60 °C	74/55 °C	15.00 kΩ
LCI 20W 350mA-900mA TOP C	800 mA	11 V	25.0 V	20.0 W	24.3 W	112 mA	0.94	80 °C	-25 ... 60 °C	74/55 °C	10.00 kΩ
LCI 20W 350mA-900mA TOP C	850 mA	11 V	23.5 V	20.0 W	24.4 W	112 mA	0.95	80 °C	-25 ... 60 °C	74/55 °C	5.36 kΩ
LCI 20W 350mA-900mA TOP C	900 mA	10 V	22.2 V	20.0 W	24.5 W	112 mA	0.95	80 °C	-25 ... 60 °C	74/55 °C	short circuit (0 Ω)

ACCES-SORIES

I-SELECT PLUG

Product description

- Ready-for-use resistor to set output current value
- Resistor is base isolated
- Resistor power 0.25 W
- Resistor value tolerance ± 1 %

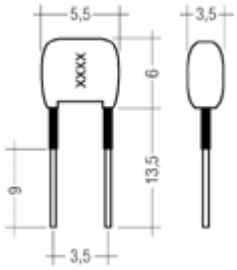

Ordering data

Type	Article number	Colour	Marking	Resistor value	Packaging, bag	Weight per pc.
I-SELECT PLUG MAX GR	**28000274**	Grey	MAX	0.0 kΩ	10 pc(s).	0.001 kg
I-SELECT PLUG 500mA GN	**28000277**	Green	0500	49.9 kΩ	10 pc(s).	0.001 kg
I-SELECT PLUG 700mA GN	**28000278**	Green	0700	22.0 kΩ	10 pc(s).	0.001 kg

IP20 SELV EL RoHS

NEW

TALEXconverter LCI 35 W 350mA–900mA TOP C

TOP series

Product description

- Fixed output built-in LED control gear
- Constant current LED control gear
- Output current adjustable between 350 – 900 mA
- Max. output power 35 W
- Nominal life of 50,000 h (at ta 50 °C with a failure rate max. 0.2 % per 1,000 h)
- For luminaires of protection class I and protection class II
- Temperature protection as per EN 61347-2-13 C5e
- 5-year guarantee

Properties

- Casing: polycarbonate, white
- Type of protection IP20

Functions

- Intelligent Temperature Guard (overtemperature protection)
- Intelligent Temperature Management (temperature monitoring of LED module)
- Short-circuit protection
- Overload protection
- Suitable for emergency lighting units acc. to EN 50172

→ For product data sheet go to www.tridonic.com, or available on request

→

Product matrix, page 15

For standards see data sheet

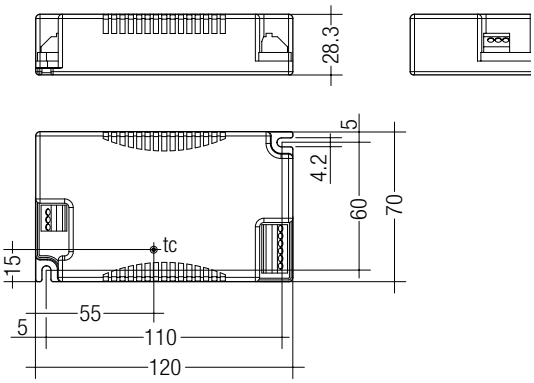

Technical data

Rated supply voltage	220 – 240 V
Input voltage, AC	198 – 264 V
Input voltage range, DC	176 – 280 V (start ≥ 198 V DC)
Mains frequency	0 / 50 / 60 Hz
Leakage current (PE)	< 0.5 mA
Max. input power	42 W
Efficiency (at 230 V, 50 Hz, full load)	88 – 90 %
THD (at 230 V, 50 Hz, full load)	< 10 %
Output current tolerance	± 5 %
Output current ripple	± 15 %
Max. output current peak	Output current + 20 %
Max. output voltage (no-load voltage)	120 V
Time to light (at 230 V, 50 Hz, full load)	< 0.5 s
Time to light (DC mode)	< 0.5 s
Hold on time at power failure or shutdown	< 0.5 s
Switchover time (AC/DC)	< 0.5 s
PWM frequency (in case of error)	300 Hz
Dimensions L x W x H	120 x 70 x 28.3 mm

Ordering data

Type	Article number	Packaging, carton	Packaging, pallet	Weight per pc.
LCI 35W 350mA-900mA TOP C	**28000193**	10 pc(s).	960 pc(s).	0.152 kg

Specific technical data

Type	Output current	Min. output voltage	Max. output voltage	Max. output power	Input power (at 230 V, 50 Hz, full load)	Input current (at 230 V, 50 Hz, full load)	λ (at 230 V, 50 Hz, full load)	tc point max.	Ambient temperature ta	tc/ta for ≥ 50,000 h	I-select resistor value
LCI 35W 350mA-900mA TOP C	350 mA	40.5 V	90.0 V	31.5 W	35.3 W	159 mA	0.965	85 °C	-25 ... +65 °C	85/65 °C	open
LCI 35W 350mA-900mA TOP C	400 mA	39.4 V	87.5 V	35.0 W	39.1 W	175 mA	0.970	80 °C	-25 ... +60 °C	80/60 °C	66.50 kΩ
LCI 35W 350mA-900mA TOP C	450 mA	35.0 V	77.8 V	35.0 W	39.7 W	178 mA	0.970	80 °C	-25 ... +55 °C	80/55 °C	57.60 kΩ
LCI 35W 350mA-900mA TOP C	500 mA	31.5 V	70.0 V	35.0 W	39.6 W	177 mA	0.970	80 °C	-25 ... +55 °C	80/55 °C	49.90 kΩ
LCI 35W 350mA-900mA TOP C	550 mA	28.6 V	63.6 V	35.0 W	39.7 W	178 mA	0.970	80 °C	-25 ... +55 °C	80/55 °C	42.20 kΩ
LCI 35W 350mA-900mA TOP C	600 mA	26.3 V	58.3 V	35.0 W	40.0 W	179 mA	0.970	80 °C	-25 ... +55 °C	80/55 °C	35.70 kΩ
LCI 35W 350mA-900mA TOP C	650 mA	24.2 V	53.8 V	35.0 W	39.9 W	178 mA	0.970	80 °C	-25 ... +55 °C	80/55 °C	28.70 kΩ
LCI 35W 350mA-900mA TOP C	700 mA	22.5 V	50.0 V	35.0 W	39.7 W	178 mA	0.970	80 °C	-25 ... +55 °C	80/55 °C	22.00 kΩ
LCI 35W 350mA-900mA TOP C	750 mA	21.0 V	46.7 V	35.0 W	39.3 W	176 mA	0.970	80 °C	-25 ... +55 °C	80/55 °C	15.00 kΩ
LCI 35W 350mA-900mA TOP C	800 mA	19.7 V	43.8 V	35.0 W	39.7 W	178 mA	0.970	80 °C	-25 ... +55 °C	80/55 °C	10.00 kΩ
LCI 35W 350mA-900mA TOP C	850 mA	18.5 V	41.2 V	35.0 W	39.7 W	178 mA	0.970	80 °C	-25 ... +55 °C	80/55 °C	5.36 kΩ
LCI 35W 350mA-900mA TOP C	900 mA	17.5 V	38.9 V	35.0 W	39.6 W	177 mA	0.970	75 °C	-25 ... +50 °C	75/50 °C	short circuit (0 Ω)

ACCES-SORIES

I-SELECT PLUG

Product description

- Ready-for-use resistor to set output current value
- Resistor is base isolated
- Resistor power 0.25 W
- Resistor value tolerance ± 1 %

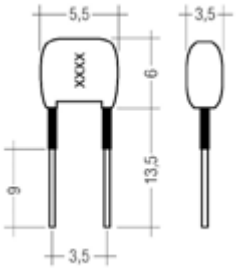

Ordering data

Type	Article number	Colour	Marking	Resistor value	Packaging, bag	Weight per pc.
I-SELECT PLUG MAX GR	**28000274**	Grey	MAX	0.0 kΩ	10 pc(s).	0.001 kg
I-SELECT PLUG 500mA GN	**28000277**	Green	0500	49.9 kΩ	10 pc(s).	0.001 kg
I-SELECT PLUG 700mA GN	**28000278**	Green	0700	22.0 kΩ	10 pc(s).	0.001 kg

ACCES-SORIES

LCF 12V FAN DRIVER

Product description

- Fan driver module with 12.4 V output voltage
- Drives the fan permanently (independent of the optional temperature sensor)
- Connection: stranded wires 0.2 mm², stripped wire endings twisted and tin-plated
- Max. output power of the LED control gear will be reduced by the power consumption of the fan and LCF 12V FAN DRIVER

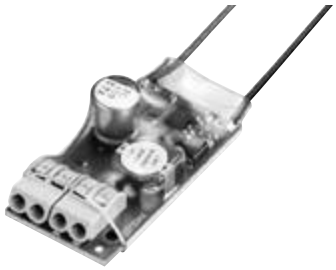

Technical data

Input voltage, DC	25 – 120 V
Output voltage DC	12.4 V
Max. output current (input voltage 25 – 49 V)	50 mA
Max. output current (input voltage 50 – 120 V)	70 mA
Max. power consumption incl. fan (at 30 mA)	0.55 W
Max. power consumption incl. fan (at 50 mA)	0.90 W
Max. power consumption incl. fan (at 70 mA)	1.25 W
Ambient temperature ta (at lifetime 50,000 h)	-25 ... +65 °C
Dimensions L x W x H	45 x 23 x 14 mm

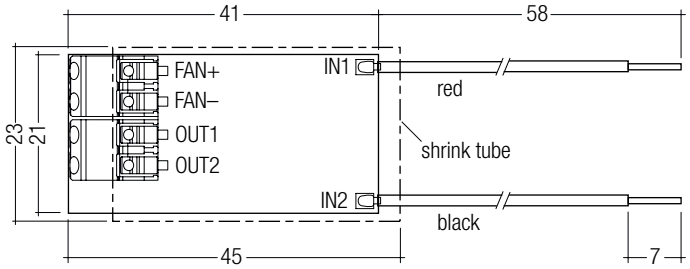

Ordering data

Type	Article number	Packaging carton	Packaging pallet	Weight per pc.
LCF 12V FAN DRIVER	**86459562**	50 pc(s).	1,200 pc(s).	0.01 kg

IP20 SELV RoHS

NEW

TALEXconverter LCI 35 W 900mA–1750mA TOP C

TOP series

Product description

- Fixed output built-in LED control gear
- Constant current LED control gear
- Output current adjustable between 900 – 1,750 mA
- Max. output power 35 W
- Nominal life of 50,000 h (at ta 50 °C with a failure rate max. 0.2 % per 1,000 h)
- For luminaires of protection class I and protection class II
- Temperature protection as per EN 61347-2-13 C5e
- 5-year guarantee

Properties

- Casing: polycarbonate, white
- Type of protection IP20

Functions

- Intelligent Temperature Guard (overtemperature protection)
- Intelligent Temperature Management (temperature monitoring of LED module)
- Short-circuit protection
- Overload protection
- Suitable for emergency lighting units acc. to EN 50172

→ For product data sheet go to www.tridonic.com, or available on request

Product matrix, page 15

For standards see data sheet

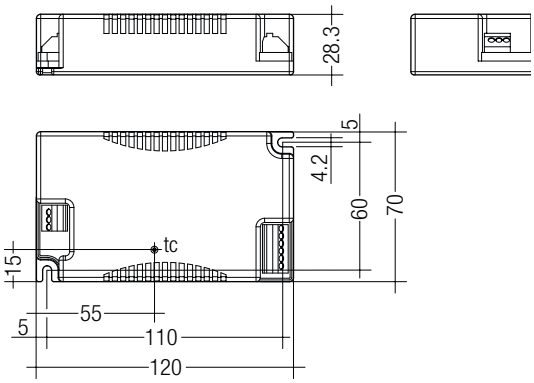

Technical data

Rated supply voltage	220 – 240 V
Input voltage, AC	198 – 264 V
Input voltage range, DC	176 – 280 V (start ≥ 198 V DC)
Mains frequency	0 / 50 / 60 Hz
Leakage current (PE)	< 0.5 mA
Max. input power	42.5 W
Efficiency (at 230 V, 50 Hz, full load)	84 – 87 %
THD (at 230 V, 50 Hz, full load)	< 10 %
Output current tolerance	± 5 %
Output current ripple	± 15 %
Max. output current peak	Output current + 20 %
Max. output voltage (no-load voltage)	60 V
Time to light (at 230 V, 50 Hz, full load)	< 0.5 s
Time to light (DC mode)	< 0.5 s
Hold on time at power failure or shutdown	< 0.5 s
Switchover time (AC/DC)	< 0.5 s
PWM frequency	300 Hz
Dimensions L x W x H	120 x 70 x 28.3 mm

Ordering data

Type	Article number	Packaging, carton	Packaging, pallet	Weight per pc.
LCI 35W 900mA-1750mA TOP C	**28000195**	10 pc(s).	960 pc(s).	0.158 kg

Specific technical data

Type	Output current	Min. output voltage	Max. output voltage	Max. output power	Input power (at 230 V, 50 Hz, full load)	Input current (at 230 V, 50 Hz, full load)	λ (at 230 V, 50 Hz, full load)	tc point max.	Ambient temperature ta	tc/ta for ≥ 50,000 h	I-select resistor value
LCI 35W 900mA-1750mA TOP C	900 mA	17.5 V	38.9 V	35 W	40.2 W	181 mA	0.97	85 °C	-25 ... +60 °C	85/60 °C	open
LCI 35W 900mA-1750mA TOP C	950 mA	16.6 V	36.8 V	35 W	40.2 W	181 mA	0.97	85 °C	-25 ... +60 °C	85/60 °C	69.80 kΩ
LCI 35W 900mA-1750mA TOP C	1.000 mA	15.8 V	35.0 V	35 W	40.2 W	180 mA	0.97	85 °C	-25 ... +60 °C	85/60 °C	64.90 kΩ
LCI 35W 900mA-1750mA TOP C	1.050 mA	15.0 V	33.3 V	35 W	40.2 W	180 mA	0.97	85 °C	-25 ... +60 °C	85/60 °C	56.00 kΩ
LCI 35W 900mA-1750mA TOP C	1.100 mA	14.3 V	31.8 V	35 W	40.5 W	181 mA	0.97	85 °C	-25 ... +60 °C	85/60 °C	47.50 kΩ
LCI 35W 900mA-1750mA TOP C	1.150 mA	13.7 V	30.4 V	35 W	40.5 W	181 mA	0.97	80 °C	-25 ... +55 °C	80/55 °C	43.20 kΩ
LCI 35W 900mA-1750mA TOP C	1.200 mA	13.1 V	29.2 V	35 W	40.6 W	182 mA	0.97	80 °C	-25 ... +55 °C	80/55 °C	40.20 kΩ
LCI 35W 900mA-1750mA TOP C	1.250 mA	12.6 V	28.0 V	35 W	40.8 W	183 mA	0.97	80 °C	-25 ... +55 °C	80/55 °C	36.50 kΩ
LCI 35W 900mA-1750mA TOP C	1.300 mA	12.1 V	26.9 V	35 W	40.8 W	183 mA	0.97	80 °C	-25 ... +55 °C	80/55 °C	32.40 kΩ
LCI 35W 900mA-1750mA TOP C	1.350 mA	11.7 V	25.9 V	35 W	41.0 W	183 mA	0.97	75 °C	-25 ... +50 °C	75/50 °C	28.70 kΩ
LCI 35W 900mA-1750mA TOP C	1.400 mA	11.3 V	25.0 V	35 W	41.1 W	184 mA	0.97	75 °C	-25 ... +50 °C	75/50 °C	22.00 kΩ
LCI 35W 900mA-1750mA TOP C	1.450 mA	10.9 V	24.1 V	35 W	41.1 W	184 mA	0.97	75 °C	-25 ... +50 °C	75/50 °C	17.80 kΩ
LCI 35W 900mA-1750mA TOP C	1.500 mA	10.5 V	23.3 V	35 W	41.2 W	184 mA	0.97	75 °C	-25 ... +50 °C	75/50 °C	15.00 kΩ
LCI 35W 900mA-1750mA TOP C	1.550 mA	10.2 V	22.6 V	35 W	41.4 W	185 mA	0.97	75 °C	-25 ... +50 °C	75/50 °C	12.10 kΩ
LCI 35W 900mA-1750mA TOP C	1.600 mA	9.8 V	21.9 V	35 W	41.4 W	185 mA	0.97	75 °C	-25 ... +50 °C	75/50 °C	9.30 kΩ
LCI 35W 900mA-1750mA TOP C	1.650 mA	9.5 V	21.2 V	35 W	41.4 W	185 mA	0.97	80 °C	-25 ... +50 °C	80/50 °C	6.49 kΩ
LCI 35W 900mA-1750mA TOP C	1.700 mA	9.3 V	20.6 V	35 W	41.7 W	187 mA	0.97	80 °C	-25 ... +50 °C	80/50 °C	3.83 kΩ
LCI 35W 900mA-1750mA TOP C	1.750 mA	9.0 V	20.0 V	35 W	41.7 W	187 mA	0.97	80 °C	-25 ... +50 °C	80/50 °C	short circuit (0 Ω)

ACCES-SORIES

I-SELECT PLUG

Product description

- Ready-for-use resistor to set output current value
- Resistor is base isolated
- Resistor power 0.25 W
- Resistor value tolerance ± 1 %

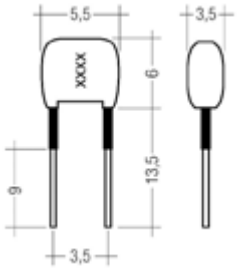

Ordering data

Type	Article number	Colour	Marking	Resistor value	Packaging, bag	Weight per pc.
I-SELECT PLUG MAX GR	**28000274**	Grey	MAX	0.0 kΩ	10 pc(s).	0.001 kg
I-SELECT PLUG 1050mA BR	**28000279**	Brown	1050	56.0 kΩ	10 pc(s).	0.001 kg
I-SELECT PLUG 1400mA BR	**28000280**	Brown	1400	22.0 kΩ	10 pc(s).	0.001 kg

ACCES-SORIES

LCF 12V FAN DRIVER

Product description

- Fan driver module with 12.4 V output voltage
- Drives the fan permanently (independent of the optional temperature sensor)
- Connection: stranded wires 0.2 mm², stripped wire endings twisted and tin-plated
- Max. output power of the LED control gear will be reduced by the power consumption of the fan and LCF 12V FAN DRIVER

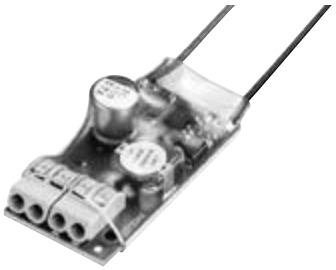

Technical data

Input voltage, DC	25 – 120 V
Output voltage DC	12.4 V
Max. output current (input voltage 25 – 49 V)	50 mA
Max. output current (input voltage 50 – 120 V)	70 mA
Max. power consumption incl. fan (at 30 mA)	0.55 W
Max. power consumption incl. fan (at 50 mA)	0.90 W
Max. power consumption incl. fan (at 70 mA)	1.25 W
Ambient temperature ta (at lifetime 50,000 h)	-25 ... +65 °C
Dimensions L x W x H	45 x 23 x 14 mm

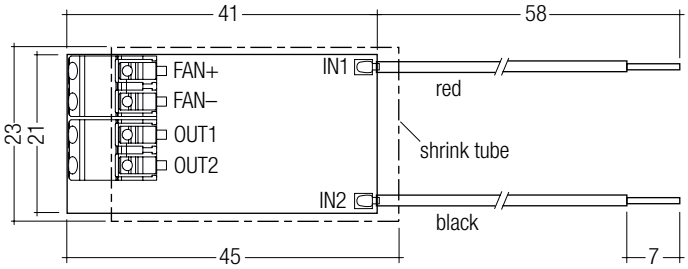

Ordering data

Type	Article number	Packaging carton	Packaging pallet	Weight per pc.
LCF 12V FAN DRIVER	**86459562**	50 pc(s).	1,200 pc(s).	0.01 kg

IP20 SELV RoHS

NEW

TALEXconverter LCI 55 W 900mA–1750mA TOP C

TOP series

Product description

- Fixed output built-in LED control gear
- Constant current LED control gear
- Output current adjustable between 900 – 1,750 mA
- Max. output power 55 W
- Nominal life of 50,000 h (at ta 50 °C with a failure rate max. 0.2 % per 1,000 h)
- For luminaires of protection class I and protection class II
- Temperature protection as per EN 61347-2-13 C5e
- 5-year guarantee

Properties

- Casing: polycarbonate, white
- Type of protection IP20

Functions

- Intelligent Temperature Guard (overtemperature protection)
- Intelligent Temperature Management (temperature monitoring of LED module)
- Short-circuit protection
- Overload protection
- Suitable for emergency lighting units acc. to EN 50172

→ For product data sheet go to www.tridonic.com, or available on request

→

Product matrix, page 15

For standards see data sheet

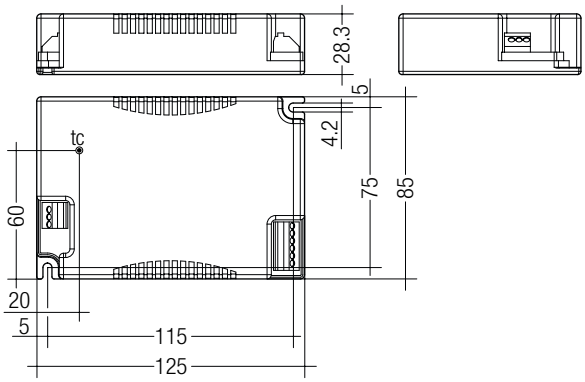

Technical data

Rated supply voltage	220 – 240 V
Input voltage, AC	198 – 264 V
Input voltage range, DC	176 – 280 V (start ≥ 198 V DC)
Mains frequency	0 / 50 / 60 Hz
Leakage current (PE)	< 0.5 mA
Max. input power	64.5 W
Efficiency (at 230 V, 50 Hz, full load)	88 – 90 %
THD (at 230 V, 50 Hz, full load)	10 %
Output current tolerance	± 5 %
Output current ripple	± 15 %
Max. output current peak	Output current + 20 %
Max. output voltage (no-load voltage)	60 V
Time to light (at 230 V, 50 Hz, full load)	< 0.5 s
Hold on time at power failure or shutdown	< 0.5 s
Switchover time (AC/DC)	< 0.5 s
Dimensions L x W x H	125 x 85 x 28.3 mm

Ordering data

Type	Article number	Packaging, carton	Packaging, pallet	Weight per pc.
LCI 55W 900mA-1750mA TOP C	**28000199**	10 pc(s).	580 pc(s).	0.178 kg

Specific technical data

Type	Output current	Min. output voltage	Max. output voltage	Max. output power	Input power (at 230 V, 50 Hz, full load)	Input current (at 230 V, 50 Hz, full load)	λ (at 230 V, 50 Hz, full load)	tc point max.	Ambient temperature ta	tc/ta for ≥ 50,000 h	I-select resistor value
LCI 55W 900mA-1750mA TOP C	900 mA	22 V	48.0 V	43.2 W	48.2 W	216 mA	0.97	70 °C	-25 ... 55 °C	70/55 °C	open
LCI 55W 900mA-1750mA TOP C	950 mA	22 V	48.0 V	45.6 W	50.9 W	228 mA	0.97	70 °C	-25 ... 55 °C	70/55 °C	69.80 kΩ
LCI 55W 900mA-1750mA TOP C	1,000 mA	22 V	48.0 V	48.0 W	53.6 W	239 mA	0.98	70 °C	-25 ... 55 °C	70/55 °C	64.90 kΩ
LCI 55W 900mA-1750mA TOP C	1,050 mA	22 V	48.0 V	50.4 W	56.3 W	251 mA	0.98	70 °C	-25 ... 55 °C	70/55 °C	56.00 kΩ
LCI 55W 900mA-1750mA TOP C	1,100 mA	22 V	48.0 V	52.8 W	58.9 W	262 mA	0.98	65 °C	-25 ... 50 °C	65/50 °C	47.50 kΩ
LCI 55W 900mA-1750mA TOP C	1,150 mA	22 V	47.8 V	55.0 W	61.6 W	274 mA	0.98	65 °C	-25 ... 50 °C	65/50 °C	43.20 kΩ
LCI 55W 900mA-1750mA TOP C	1,200 mA	21 V	45.8 V	55.0 W	61.4 W	273 mA	0.98	65 °C	-25 ... 50 °C	65/50 °C	40.20 kΩ
LCI 55W 900mA-1750mA TOP C	1,250 mA	20 V	44.0 V	55.0 W	61.2 W	272 mA	0.98	65 °C	-25 ... 50 °C	65/50 °C	36.50 kΩ
LCI 55W 900mA-1750mA TOP C	1,300 mA	19 V	42.3 V	55.0 W	61.4 W	273 mA	0.98	65 °C	-25 ... 50 °C	65/50 °C	32.40 kΩ
LCI 55W 900mA-1750mA TOP C	1,350 mA	18 V	40.7 V	55.0 W	61.3 W	273 mA	0.98	65 °C	-25 ... 50 °C	65/50 °C	28.70 kΩ
LCI 55W 900mA-1750mA TOP C	1,400 mA	18 V	39.3 V	55.0 W	61.9 W	275 mA	0.98	65 °C	-25 ... 50 °C	65/50 °C	22.00 kΩ
LCI 55W 900mA-1750mA TOP C	1,450 mA	17 V	37.9 V	55.0 W	61.5 W	274 mA	0.98	65 °C	-25 ... 50 °C	65/50 °C	17.80 kΩ
LCI 55W 900mA-1750mA TOP C	1,500 mA	17 V	36.7 V	55.0 W	61.8 W	275 mA	0.98	65 °C	-25 ... 50 °C	65/50 °C	15.00 kΩ
LCI 55W 900mA-1750mA TOP C	1,550 mA	16 V	35.5 V	55.0 W	62.1 W	276 mA	0.98	65 °C	-25 ... 50 °C	65/50 °C	12.10 kΩ
LCI 55W 900mA-1750mA TOP C	1,600 mA	15 V	34.4 V	55.0 W	62.2 W	277 mA	0.98	65 °C	-25 ... 50 °C	65/50 °C	9.30 kΩ
LCI 55W 900mA-1750mA TOP C	1,650 mA	15 V	33.3 V	55.0 W	62.3 W	277 mA	0.98	65 °C	-25 ... 50 °C	65/50 °C	6.49 kΩ
LCI 55W 900mA-1750mA TOP C	1,700 mA	15 V	32.4 V	55.0 W	62.6 W	278 mA	0.98	65 °C	-25 ... 50 °C	65/50 °C	3.83 kΩ
LCI 55W 900mA-1750mA TOP C	1,750 mA	14 V	31.4 V	55.0 W	62.5 W	277 mA	0.98	65 °C	-25 ... 50 °C	65/50 °C	short circuit (0 Ω)

ACCES-SORIES

I-SELECT PLUG

Product description

- Ready-for-use resistor to set output current value
- Resistor is base isolated
- Resistor power 0.25 W
- Resistor value tolerance ± 1 %

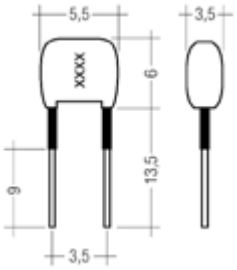

Ordering data

Type	Article number	Colour	Marking	Resistor value	Packaging, bag	Weight per pc.
I-SELECT PLUG MAX GR	**28000274**	Grey	MAX	0.0 kΩ	10 pc(s).	0.001 kg
I-SELECT PLUG 1050mA BR	**28000279**	Brown	1050	56.0 kΩ	10 pc(s).	0.001 kg
I-SELECT PLUG 1400mA BR	**28000280**	Brown	1400	22.0 kΩ	10 pc(s).	0.001 kg

ACCES-SORIES

LCF 12V FAN DRIVER

Product description

- Fan driver module with 12.4 V output voltage
- Drives the fan permanently (independent of the optional temperature sensor)
- Connection: stranded wires 0.2 mm², stripped wire endings twisted and tin-plated
- Max. output power of the LED control gear will be reduced by the power consumption of the fan and LCF 12V FAN DRIVER

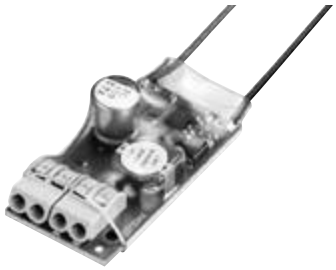

Technical data

Input voltage, DC	25 – 120 V
Output voltage DC	12.4 V
Min. output voltage LED control gear	26 V
Max. output current (input voltage 25 – 49 V)	50 mA
Max. output current (input voltage 50 – 120 V)	70 mA
Max. power consumption incl. fan (at 30 mA)	0.55 W
Max. power consumption incl. fan (at 50 mA)	0.90 W
Max. power consumption incl. fan (at 70 mA)	1.25 W
Ambient temperature ta (at lifetime 50,000 h)	-25 ... +65 °C
Dimensions L x W x H	45 x 23 x 14 mm

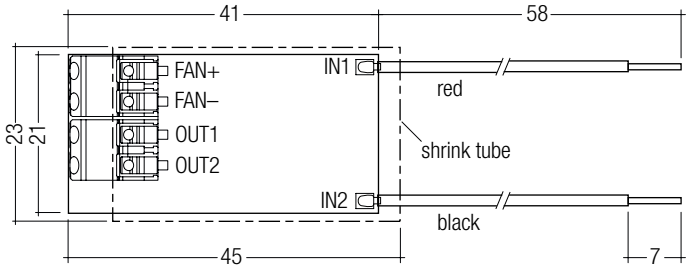

Ordering data

Type	Article number	Packaging carton	Packaging pallet	Weight per pc.
LCF 12V FAN DRIVER	**86459562**	50 pc(s).	1,200 pc(s).	0.01 kg

IP20 SELV RoHS

NEW

TALEXconverter LCI 20 W 350mA–900mA TOP SR

TOP series

Product description

- Independent fixed output LED control gear
- Constant current LED control gear
- Output current adjustable between 350 – 900 mA
- Max. output power 20 W
- Nominal life time up to 50,000 h (at ta 55 °C with a failure rate ≤ 0.2 % per 1,000 h)
- For luminaires of protection class I and protection class II
- For luminaires with M and MM as per EN 60598, VDE 0710 and VDE 0711
- Temperature protection as per EN 61347-2-13 C5e
- 5-year guarantee

Properties

- Casing: polycarbonate, white
- Type of protection IP20
- No tools required for installation
- Integrated terminal cover and strain relief
- 5 separate strain reliefs

Functions

- Intelligent Temperature Guard (overtemperature protection)
- Short-circuit protection
- Overload protection
- Suitable for emergency lighting units acc. to EN 50172

→ For product data sheet go to www.tridonic.com, or available on request

→

Product matrix, page 15

For standards see data sheet

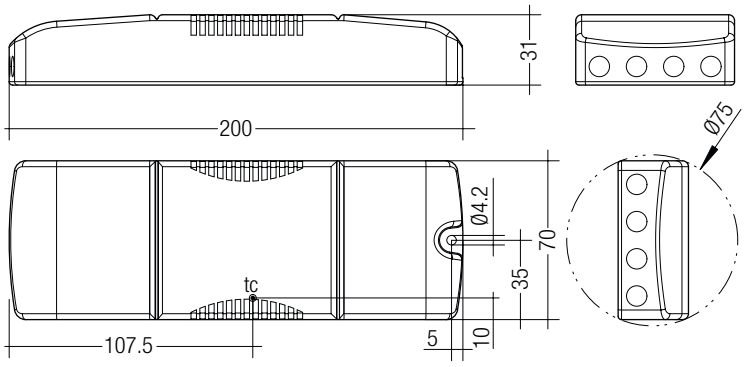

Technical data

Rated supply voltage	220 – 240 V
Input voltage, AC	198 – 264 V
Input voltage range, DC	176 – 280 V (start ≥ 198 V DC)
Mains frequency	0 / 50 / 60 Hz
Leakage current (PE)	< 0.5 mA
Max. input power	24.7 W
Efficiency (at 230 V, 50 Hz, full load)	81 – 85.5 %
THD (at 230 V, 50 Hz, full load)	10 %
Output current tolerance	± 5 %
Output current ripple	± 15 %
Max. output current peak	Output current + 20 %
Max. output voltage (no-load voltage)	60 V
Time to light (at 230 V, 50 Hz, full load)	< 0.5 s
Hold on time at power failure or shutdown	1 s
Switchover time (AC/DC)	< 0.5 s
Dimensions L x W x H	200 x 70 x 31 mm

Ordering data

Type	Article number	Packaging, carton	Packaging, pallet	Weight per pc.
LCI 20W 350mA-900mA TOP SR	**28000192**	10 pc(s).	400 pc(s).	0.179 kg

Specific technical data

Type	Output current	Min. output voltage	Max. output voltage	Max. output power	Input power (at 230 V, 50 Hz, full load)	Input current (at 230 V, 50 Hz full load)	λ (at 230 V, 50 Hz, full load)	tc point max.	Ambient temperature ta	tc/ta for ≥ 50,000 h	I-select resistor value
LCI 20W 350mA-900mA TOP SR	350 mA	22 V	48.0 V	16.8 W	19.6 W	93 mA	0.92	80 °C	-25 ... 65 °C	76/60 °C	open
LCI 20W 350mA-900mA TOP SR	400 mA	22 V	48.0 V	19.2 W	23.3 W	108 mA	0.94	80 °C	-25 ... 65 °C	76/60 °C	66.50 kΩ
LCI 20W 350mA-900mA TOP SR	450 mA	20 V	44.4 V	20.0 W	23.4 W	108 mA	0.94	80 °C	-25 ... 65 °C	76/60 °C	57.60 kΩ
LCI 20W 350mA-900mA TOP SR	500 mA	18 V	40.0 V	20.0 W	23.5 W	109 mA	0.94	80 °C	-25 ... 65 °C	76/60 °C	49.90 kΩ
LCI 20W 350mA-900mA TOP SR	550 mA	16 V	36.4 V	20.0 W	23.7 W	110 mA	0.94	80 °C	-25 ... 65 °C	76/60 °C	42.20 kΩ
LCI 20W 350mA-900mA TOP SR	600 mA	15 V	33.3 V	20.0 W	23.8 W	110 mA	0.94	80 °C	-25 ... 65 °C	76/60 °C	35.70 kΩ
LCI 20W 350mA-900mA TOP SR	650 mA	14 V	30.8 V	20.0 W	23.9 W	111 mA	0.94	80 °C	-25 ... 60 °C	74/55 °C	28.70 kΩ
LCI 20W 350mA-900mA TOP SR	700 mA	13 V	28.6 V	20.0 W	24.0 W	111 mA	0.94	80 °C	-25 ... 60 °C	74/55 °C	22.00 kΩ
LCI 20W 350mA-900mA TOP SR	750 mA	12 V	26.7 V	20.0 W	24.1 W	111 mA	0.94	80 °C	-25 ... 60 °C	74/55 °C	15.00 kΩ
LCI 20W 350mA-900mA TOP SR	800 mA	11 V	25.0 V	20.0 W	24.3 W	112 mA	0.94	80 °C	-25 ... 60 °C	74/55 °C	10.00 kΩ
LCI 20W 350mA-900mA TOP SR	850 mA	11 V	23.5 V	20.0 W	24.4 W	112 mA	0.95	80 °C	-25 ... 60 °C	74/55 °C	5.36 kΩ
LCI 20W 350mA-900mA TOP SR	900 mA	10 V	22.2 V	20.0 W	24.5 W	112 mA	0.95	80 °C	-25 ... 60 °C	74/55 °C	short circuit (0 Ω)

ACCES-SORIES

I-SELECT PLUG

Product description

- Ready-for-use resistor to set output current value
- Resistor is base isolated
- Resistor power 0.25 W
- Resistor value tolerance ± 1 %

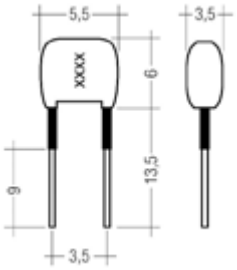

Ordering data

Type	Article number	Colour	Marking	Resistor value	Packaging, bag	Weight per pc.
I-SELECT PLUG MAX GR	**28000274**	Grey	MAX	0.0 kΩ	10 pc(s).	0.001 kg
I-SELECT PLUG 500mA GN	**28000277**	Green	0500	49.9 kΩ	10 pc(s).	0.001 kg
I-SELECT PLUG 700mA GN	**28000278**	Green	0700	22.0 kΩ	10 pc(s).	0.001 kg

IP20 SELV RoHS

NEW

TALEXconverter LCI 35 W 350mA–900mA TOP SR

TOP series

Product description

- Independent fixed output LED control gear
- Constant current LED control gear
- Output current adjustable between 350 – 900 mA
- Max. output power 35 W
- Nominal life of 50,000 h (at ta 50 °C with a failure rate max. 0.2 % per 1,000 h)
- For luminaires of protection class I and protection class II
- For luminaires with M and MM as per EN 60598, VDE 0710 and VDE 0711
- Temperature protection as per EN 61347-2-13 C5e
- 5-year guarantee

Properties

- Casing: polycarbonate, white
- Type of protection IP20
- No tools required for installation
- Integrated terminal cover and strain relief
- 5 separate strain reliefs

Functions

- Intelligent Temperature Guard (overtemperature protection)
- Intelligent Temperature Management (temperature monitoring of LED module)
- Short-circuit protection
- Overload protection
- Suitable for emergency lighting units acc. to EN 50172

→ For product data sheet go to www.tridonic.com, or available on request

→

Product matrix, page 15

For standards see data sheet

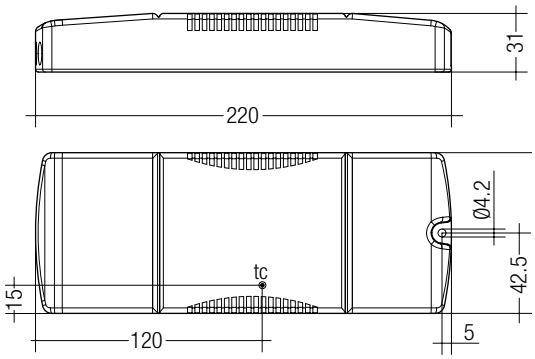

Technical data

Rated supply voltage	220 – 240 V
Input voltage, AC	198 – 264 V
Input voltage range, DC	176 – 280 V (start ≥ 198 V DC)
Mains frequency	0 / 50 / 60 Hz
Leakage current (PE)	< 0.5 mA
Max. input power	42 W
Efficiency (at 230 V, 50 Hz, full load)	88 – 90 %
THD (at 230 V, 50 Hz, full load)	< 10 %
Output current tolerance	± 5 %
Output current ripple	± 15 %
Max. output current peak	Output current + 20 %
Max. output voltage (no-load voltage)	120 V
Time to light	< 0.5 s
Hold on time at power failure or shutdown	< 0.5 s
Switchover time (AC/DC)	< 0.5 s
Dimensions L x W x H	220 x 85 x 31 mm

Ordering data

Type	Article number	Packaging, carton	Packaging, pallet	Weight per pc.
LCI 35W 350mA-900mA TOP SR	**28000194**	10 pc(s).	400 pc(s).	0.238 kg

Specific technical data

Type	Output current	Min. output voltage	Max. output voltage	Max. output power	Input power (at 230 V, 50 Hz, full load)	Input current (at 230 V, 50 Hz, full load)	λ (at 230 V, 50 Hz, full load)	tc point max.	Ambient temperature ta	tc/ta for ≥ 50,000 h	I-select resistor value
LCI 35W 350mA-900mA TOP SR	350 mA	40.5 V	90.0 V	31.5 W	35.3 W	159 mA	0.965	85 °C	-25 ... +65 °C	85/65 °C	open
LCI 35W 350mA-900mA TOP SR	400 mA	39.4 V	87.5 V	35.0 W	39.1 W	175 mA	0.970	80 °C	-25 ... +60 °C	80/60 °C	66.50 kΩ
LCI 35W 350mA-900mA TOP SR	450 mA	35.0 V	77.8 V	35.0 W	39.7 W	178 mA	0.970	80 °C	-25 ... +55 °C	80/55 °C	57.60 kΩ
LCI 35W 350mA-900mA TOP SR	500 mA	31.5 V	70.0 V	35.0 W	39.6 W	177 mA	0.970	80 °C	-25 ... +55 °C	80/55 °C	49.90 kΩ
LCI 35W 350mA-900mA TOP SR	550 mA	28.6 V	63.6 V	35.0 W	39.7 W	178 mA	0.970	80 °C	-25 ... +55 °C	80/55 °C	42.20 kΩ
LCI 35W 350mA-900mA TOP SR	600 mA	26.3 V	58.3 V	35.0 W	40.0 W	179 mA	0.970	80 °C	-25 ... +55 °C	80/55 °C	35.70 kΩ
LCI 35W 350mA-900mA TOP SR	650 mA	24.2 V	53.8 V	35.0 W	39.9 W	178 mA	0.970	80 °C	-25 ... +55 °C	80/55 °C	28.70 kΩ
LCI 35W 350mA-900mA TOP SR	700 mA	22.5 V	50.0 V	35.0 W	39.7 W	178 mA	0.970	80 °C	-25 ... +55 °C	80/55 °C	22.00 kΩ
LCI 35W 350mA-900mA TOP SR	750 mA	21.0 V	46.7 V	35.0 W	39.3 W	176 mA	0.970	80 °C	-25 ... +55 °C	80/55 °C	15.00 kΩ
LCI 35W 350mA-900mA TOP SR	800 mA	19.7 V	43.8 V	35.0 W	39.7 W	178 mA	0.970	80 °C	-25 ... +55 °C	80/55 °C	10.00 kΩ
LCI 35W 350mA-900mA TOP SR	850 mA	18.5 V	41.2 V	35.0 W	39.7 W	178 mA	0.970	80 °C	-25 ... +55 °C	80/55 °C	5.36 kΩ
LCI 35W 350mA-900mA TOP SR	900 mA	17.5 V	38.9 V	35.0 W	39.6 W	177 mA	0.970	75 °C	-25 ... +50 °C	75/50 °C	short circuit (0 Ω)

ACCES-SORIES

I-SELECT PLUG

Product description

- Ready-for-use resistor to set output current value
- Resistor is base isolated
- Resistor power 0.25 W
- Resistor value tolerance ± 1 %

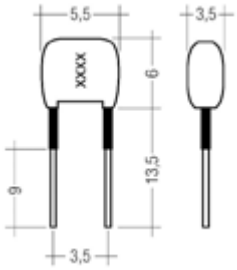

Ordering data

Type	Article number	Colour	Marking	Resistor value	Packaging, bag	Weight per pc.
I-SELECT PLUG MAX GR	**28000274**	Grey	MAX	0.0 kΩ	10 pc(s).	0.001 kg
I-SELECT PLUG 500mA GN	**28000277**	Green	0500	49.9 kΩ	10 pc(s).	0.001 kg
I-SELECT PLUG 700mA GN	**28000278**	Green	0700	22.0 kΩ	10 pc(s).	0.001 kg

ACCES-SORIES

LCF 12V FAN DRIVER

Product description

- Fan driver module with 12.4 V output voltage
- Drives the fan permanently (independent of the optional temperature sensor)
- Connection: stranded wires 0.2 mm², stripped wire endings twisted and tin-plated
- Max. output power of the LED control gear will be reduced by the power consumption of the fan and LCF 12V FAN DRIVER

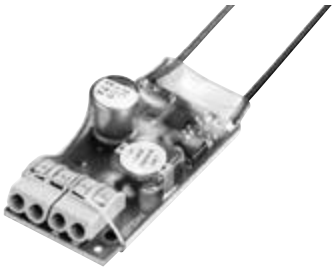

Technical data

Input voltage, DC	25 – 120 V
Output voltage DC	12.4 V
Max. output current (input voltage 25 – 49 V)	50 mA
Max. output current (input voltage 50 – 120 V)	70 mA
Max. power consumption incl. fan (at 30 mA)	0.55 W
Max. power consumption incl. fan (at 50 mA)	0.90 W
Max. power consumption incl. fan (at 70 mA)	1.25 W
Ambient temperature ta (at lifetime 50,000 h)	-25 ... +65 °C
Dimensions L x W x H	45 x 23 x 14 mm

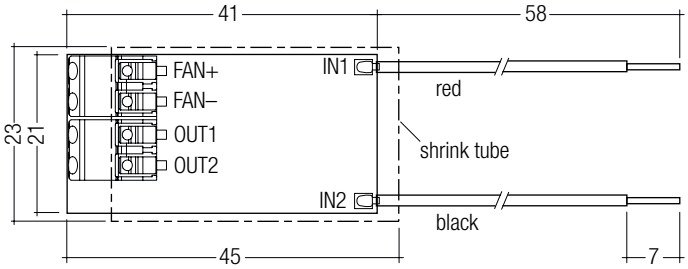

Ordering data

Type	Article number	Packaging carton	Packaging pallet	Weight per pc.
LCF 12V FAN DRIVER	**86459562**	50 pc(s).	1,200 pc(s).	0.01 kg

IP20 SELV RoHS

NEW

TALEXconverter LCI 35 W 900mA–1750mA TOP SR

TOP series

Product description

- Independent fixed output LED control gear
- Constant current LED control gear
- Output current adjustable between 900 – 1,750 mA
- Max. output power 35 W
- Nominal life of 50,000 h (at ta 50 °C with a failure rate max. 0.2 % per 1,000 h)
- For luminaires of protection class I and protection class II
- For luminaires with M and MM as per EN 60598, VDE 0710 and VDE 0711
- Temperature protection as per EN 61347-2-13 C5e
- 5-year guarantee

Properties

- Casing: polycarbonate, white
- Type of protection IP20
- No tools required for installation
- Integrated terminal cover and strain relief
- 5 separate strain reliefs

Functions

- Intelligent Temperature Guard (overtemperature protection)
- Intelligent Temperature Management (temperature monitoring of LED module)
- Short-circuit protection
- Overload protection
- Suitable for emergency lighting units acc. to EN 50172

→ For product data sheet go to www.tridonic.com, or available on request

→

Product matrix, page 15

For standards see data sheet

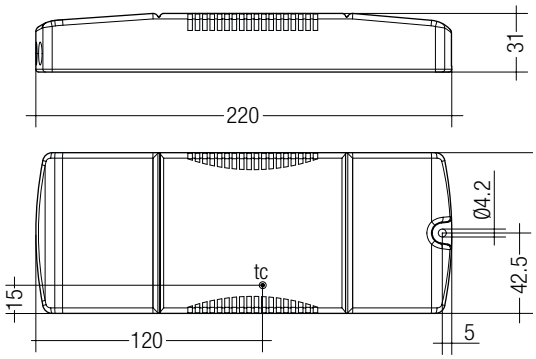

Technical data

Rated supply voltage	220 – 240 V
Input voltage, AC	198 – 264 V
Input voltage range, DC	176 – 280 V (start ≥ 198 V DC)
Mains frequency	0 / 50 / 60 Hz
Leakage current (PE)	< 0.5 mA
Max. input power	42.5 W
Efficiency (at 230 V, 50 Hz, full load)	84 – 87 %
THD (at 230 V, 50 Hz, full load)	< 10 %
Output current tolerance	± 5 %
Output current ripple	± 15 %
Max. output current peak	Output current + 20 %
Max. output voltage (no-load voltage)	60 V
Time to light	< 0.5 s
Hold on time at power failure or shutdown	< 0.5 s
Switchover time (AC/DC)	< 0.5 s
Dimensions L x W x H	220 x 85 x 31 mm

Ordering data

Type	Article number	Packaging, carton	Packaging, pallet	Weight per pc.
LCI 35W 900mA-1750mA TOP SR	**28000196**	10 pc(s).	400 pc(s).	0.243 kg

Specific technical data

Type	Output current	Min. output voltage	Max. output voltage	Max. output power	Input power (at 230 V, 50 Hz, full load)	Input current (at 230 V, 50 Hz, full load)	λ (at 230 V, 50 Hz, full load)	tc point max.	Ambient temperature ta	tc/ta for ≥ 50,000 h	I-select resistor value
LCI 35W 900mA-1750mA TOP SR	900 mA	17.5 V	38.9 V	35 W	40.2 W	181 mA	0.97	85 °C	-25 ... +60 °C	85/60 °C	open
LCI 35W 900mA-1750mA TOP SR	950 mA	16.6 V	36.8 V	35 W	40.2 W	181 mA	0.97	85 °C	-25 ... +60 °C	85/60 °C	69.80 kΩ
LCI 35W 900mA-1750mA TOP SR	1.000 mA	15.8 V	35.0 V	35 W	40.2 W	180 mA	0.97	85 °C	-25 ... +60 °C	85/60 °C	64.90 kΩ
LCI 35W 900mA-1750mA TOP SR	1.050 mA	15.0 V	33.3 V	35 W	40.2 W	180 mA	0.97	85 °C	-25 ... +60 °C	85/60 °C	56.00 kΩ
LCI 35W 900mA-1750mA TOP SR	1.100 mA	14.3 V	31.8 V	35 W	40.5 W	181 mA	0.97	85 °C	-25 ... +60 °C	85/60 °C	47.50 kΩ
LCI 35W 900mA-1750mA TOP SR	1.150 mA	13.7 V	30.4 V	35 W	40.5 W	181 mA	0.97	80 °C	-25 ... +55 °C	80/55 °C	43.20 kΩ
LCI 35W 900mA-1750mA TOP SR	1.200 mA	13.1 V	29.2 V	35 W	40.6 W	182 mA	0.97	80 °C	-25 ... +55 °C	80/55 °C	40.20 kΩ
LCI 35W 900mA-1750mA TOP SR	1.250 mA	12.6 V	28.0 V	35 W	40.8 W	183 mA	0.97	80 °C	-25 ... +55 °C	80/55 °C	36.50 kΩ
LCI 35W 900mA-1750mA TOP SR	1.300 mA	12.1 V	26.9 V	35 W	40.8 W	183 mA	0.97	80 °C	-25 ... +55 °C	80/55 °C	32.40 kΩ
LCI 35W 900mA-1750mA TOP SR	1.350 mA	11.7 V	25.9 V	35 W	41.0 W	183 mA	0.97	75 °C	-25 ... +50 °C	75/50 °C	28.70 kΩ
LCI 35W 900mA-1750mA TOP SR	1.400 mA	11.3 V	25.0 V	35 W	41.1 W	184 mA	0.97	75 °C	-25 ... +50 °C	75/50 °C	22.00 kΩ
LCI 35W 900mA-1750mA TOP SR	1.450 mA	10.9 V	24.1 V	35 W	41.1 W	184 mA	0.97	75 °C	-25 ... +50 °C	75/50 °C	17.80 kΩ
LCI 35W 900mA-1750mA TOP SR	1.500 mA	10.5 V	23.3 V	35 W	41.2 W	184 mA	0.97	75 °C	-25 ... +50 °C	75/50 °C	15.00 kΩ
LCI 35W 900mA-1750mA TOP SR	1.550 mA	10.2 V	22.6 V	35 W	41.4 W	185 mA	0.97	75 °C	-25 ... +50 °C	75/50 °C	12.10 kΩ
LCI 35W 900mA-1750mA TOP SR	1.600 mA	9.8 V	21.9 V	35 W	41.4 W	185 mA	0.97	75 °C	-25 ... +50 °C	75/50 °C	9.30 kΩ
LCI 35W 900mA-1750mA TOP SR	1.650 mA	9.5 V	21.2 V	35 W	41.4 W	185 mA	0.97	80 °C	-25 ... +50 °C	80/50 °C	6.49 kΩ
LCI 35W 900mA-1750mA TOP SR	1.700 mA	9.3 V	20.6 V	35 W	41.7 W	187 mA	0.97	80 °C	-25 ... +50 °C	80/50 °C	3.83 kΩ
LCI 35W 900mA-1750mA TOP SR	1.750 mA	9.0 V	20.0 V	35 W	41.7 W	187 mA	0.97	80 °C	-25 ... +50 °C	80/50 °C	short circuit (0 Ω)

ACCES-SORIES

I-SELECT PLUG

Product description

- Ready-for-use resistor to set output current value
- Resistor is base isolated
- Resistor power 0.25 W
- Resistor value tolerance ± 1 %

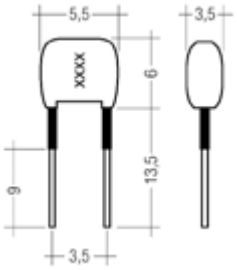

Ordering data

Type	Article number	Colour	Marking	Resistor value	Packaging, bag	Weight per pc.
I-SELECT PLUG MAX GR	**28000274**	Grey	MAX	0.0 kΩ	10 pc(s).	0.001 kg
I-SELECT PLUG 1050mA BR	**28000279**	Brown	1050	56.0 kΩ	10 pc(s).	0.001 kg
I-SELECT PLUG 1400mA BR	**28000280**	Brown	1400	22.0 kΩ	10 pc(s).	0.001 kg

ACCES-SORIES

LCF 12V FAN DRIVER

Product description

- Fan driver module with 12.4 V output voltage
- Drives the fan permanently (independent of the optional temperature sensor)
- Connection: stranded wires 0.2 mm², stripped wire endings twisted and tin-plated
- Max. output power of the LED control gear will be reduced by the power consumption of the fan and LCF 12V FAN DRIVER

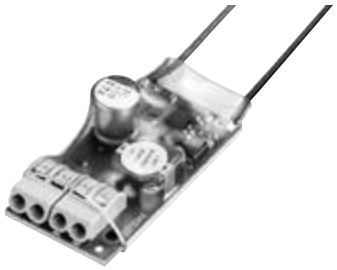

Technical data

Input voltage, DC	25 – 120 V
Output voltage DC	12.4 V
Max. output current (input voltage 25 – 49 V)	50 mA
Max. output current (input voltage 50 – 120 V)	70 mA
Max. power consumption incl. fan (at 30 mA)	0.55 W
Max. power consumption incl. fan (at 50 mA)	0.90 W
Max. power consumption incl. fan (at 70 mA)	1.25 W
Ambient temperature ta (at lifetime 50,000 h)	-25 ... +65 °C
Dimensions L x W x H	45 x 23 x 14 mm

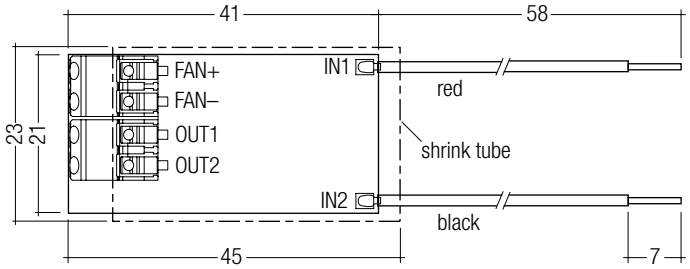

Ordering data

Type	Article number	Packaging carton	Packaging pallet	Weight per pc.
LCF 12V FAN DRIVER	**86459562**	50 pc(s).	1,200 pc(s).	0.01 kg

IP20 SELV RoHS

NEW

TALEXconverter LCI 55 W 900mA–1750mA TOP SR

TOP series

Product description

- Independent fixed output LED control gear
- Constant current LED control gear
- Output current adjustable between 900 – 1,750 mA
- Max. output power 55 W
- Nominal life of 50,000 h (at ta 50 °C with a failure rate max. 0.2 % per 1,000 h)
- For luminaires of protection class I and protection class II
- For luminaires with M and MM as per EN 60598, VDE 0710 and VDE 0711
- Temperature protection as per EN 61347-2-13 C5e
- 5-year guarantee

Properties

- Casing: polycarbonate, white
- Type of protection IP20
- No tools required for installation
- Integrated terminal cover and strain relief
- 5 separate strain reliefs

Functions

- Intelligent Temperature Guard (overtemperature protection)
- Intelligent Temperature Management (temperature monitoring of LED module)
- Short-circuit protection
- Overload protection
- Suitable for emergency lighting units acc. to EN 50172

→ For product data sheet go to www.tridonic.com, or available on request

→

Product matrix, page 15

For standards see data sheet

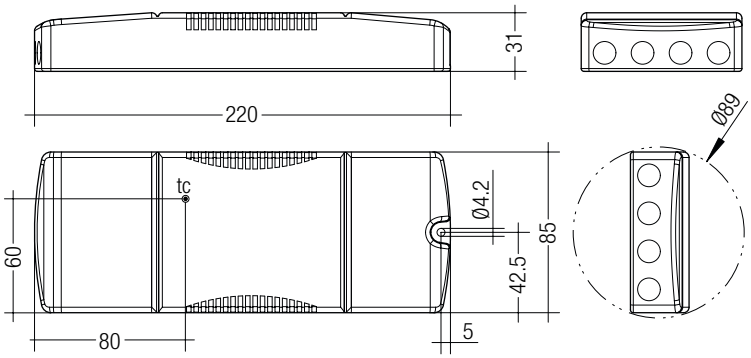

Technical data

Rated supply voltage	220 – 240 V
Input voltage, AC	198 – 264 V
Input voltage range, DC	176 – 280 V (start ≥ 198 V DC)
Mains frequency	0 / 50 / 60 Hz
Leakage current (PE)	< 0.5 mA
Max. input power	64.5 W
Efficiency (at 230 V, 50 Hz, full load)	88 – 90 %
THD (at 230 V, 50 Hz, full load)	10 %
Output current tolerance	± 5 %
Output current ripple	± 15 %
Max. output current peak	Output current + 20 %
Max. output voltage (no-load voltage)	60 V
Time to light (at 230 V, 50 Hz, full load)	< 0.5 s
Hold on time at power failure or shutdown	< 0.5 s
Switchover time (AC/DC)	< 0.5 s
Dimensions L x W x H	220 x 85 x 31 mm

Ordering data

Type	Article number	Packaging, carton	Packaging, pallet	Weight per pc.
LCI 55W 900mA-1750mA TOP SR	**28000200**	10 pc(s).	400 pc(s).	0.251 kg

Specific technical data

Type	Output current	Min. output voltage	Max. output voltage	Max. output power	Input power (at 230 V, 50 Hz, full load)	Input current (at 230 V, 50 Hz, full load)	λ (at 230 V, 50 Hz, full load)	tc point max.	Ambient temperature ta	tc/ta for ≥ 50,000 h	I-select resistor value
LCI 55W 900mA-1750mA TOP SR	900 mA	22 V	48.0 V	43.2 W	48.2 W	216 mA	0.97	70 °C	-25 ... 55 °C	70/55 °C	open
LCI 55W 900mA-1750mA TOP SR	950 mA	22 V	48.0 V	45.6 W	50.9 W	228 mA	0.97	70 °C	-25 ... 55 °C	70/55 °C	69.80 kΩ
LCI 55W 900mA-1750mA TOP SR	1,000 mA	22 V	48.0 V	48.0 W	53.6 W	239 mA	0.98	70 °C	-25 ... 55 °C	70/55 °C	64.90 kΩ
LCI 55W 900mA-1750mA TOP SR	1,050 mA	22 V	48.0 V	50.4 W	56.3 W	251 mA	0.98	70 °C	-25 ... 55 °C	70/55 °C	56.00 kΩ
LCI 55W 900mA-1750mA TOP SR	1,100 mA	22 V	48.0 V	52.8 W	58.9 W	262 mA	0.98	65 °C	-25 ... 50 °C	65/50 °C	47.50 kΩ
LCI 55W 900mA-1750mA TOP SR	1,150 mA	22 V	47.8 V	55.0 W	61.6 W	274 mA	0.98	65 °C	-25 ... 50 °C	65/50 °C	43.20 kΩ
LCI 55W 900mA-1750mA TOP SR	1,200 mA	21 V	45.8 V	55.0 W	61.4 W	273 mA	0.98	65 °C	-25 ... 50 °C	65/50 °C	40.20 kΩ
LCI 55W 900mA-1750mA TOP SR	1,250 mA	20 V	44.0 V	55.0 W	61.2 W	272 mA	0.98	65 °C	-25 ... 50 °C	65/50 °C	36.50 kΩ
LCI 55W 900mA-1750mA TOP SR	1,300 mA	19 V	42.3 V	55.0 W	61.4 W	273 mA	0.98	65 °C	-25 ... 50 °C	65/50 °C	32.40 kΩ
LCI 55W 900mA-1750mA TOP SR	1,350 mA	18 V	40.7 V	55.0 W	61.3 W	273 mA	0.98	65 °C	-25 ... 50 °C	65/50 °C	28.70 kΩ
LCI 55W 900mA-1750mA TOP SR	1,400 mA	18 V	39.3 V	55.0 W	61.9 W	275 mA	0.98	65 °C	-25 ... 50 °C	65/50 °C	22.00 kΩ
LCI 55W 900mA-1750mA TOP SR	1,450 mA	17 V	37.9 V	55.0 W	61.5 W	274 mA	0.98	65 °C	-25 ... 50 °C	65/50 °C	17.80 kΩ
LCI 55W 900mA-1750mA TOP SR	1,500 mA	17 V	36.7 V	55.0 W	61.8 W	275 mA	0.98	65 °C	-25 ... 50 °C	65/50 °C	15.00 kΩ
LCI 55W 900mA-1750mA TOP SR	1,550 mA	16 V	35.5 V	55.0 W	62.1 W	276 mA	0.98	65 °C	-25 ... 50 °C	65/50 °C	12.10 kΩ
LCI 55W 900mA-1750mA TOP SR	1,600 mA	15 V	34.4 V	55.0 W	62.2 W	277 mA	0.98	65 °C	-25 ... 50 °C	65/50 °C	9.30 kΩ
LCI 55W 900mA-1750mA TOP SR	1,650 mA	15 V	33.3 V	55.0 W	62.3 W	277 mA	0.98	65 °C	-25 ... 50 °C	65/50 °C	6.49 kΩ
LCI 55W 900mA-1750mA TOP SR	1,700 mA	15 V	32.4 V	55.0 W	62.6 W	278 mA	0.98	65 °C	-25 ... 50 °C	65/50 °C	3.83 kΩ
LCI 55W 900mA-1750mA TOP SR	1,750 mA	14 V	31.4 V	55.0 W	62.5 W	277 mA	0.98	65 °C	-25 ... 50 °C	65/50 °C	short circuit (0 Ω)

ACCES-SORIES

I-SELECT PLUG

Product description

- Ready-for-use resistor to set output current value
- Resistor is base isolated
- Resistor power 0.25 W
- Resistor value tolerance ± 1 %

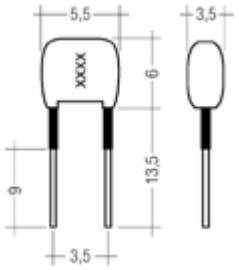

Ordering data

Type	Article number	Colour	Marking	Resistor value	Packaging, bag	Weight per pc.
I-SELECT PLUG MAX GR	**28000274**	Grey	MAX	0.0 kΩ	10 pc(s).	0.001 kg
I-SELECT PLUG 1050mA BR	**28000279**	Brown	1050	56.0 kΩ	10 pc(s).	0.001 kg
I-SELECT PLUG 1400mA BR	**28000280**	Brown	1400	22.0 kΩ	10 pc(s).	0.001 kg

ACCES-SORIES

LCF 12V FAN DRIVER

Product description

- Fan driver module with 12.4 V output voltage
- Drives the fan permanently (independent of the optional temperature sensor)
- Connection: stranded wires 0.2 mm², stripped wire endings twisted and tin-plated
- Max. output power of the LED control gear will be reduced by the power consumption of the fan and LCF 12V FAN DRIVER

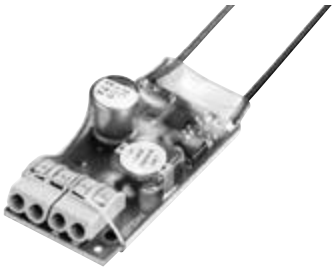

Technical data

Input voltage, DC	25 – 120 V
Output voltage DC	12.4 V
Min. output voltage LED control gear	26 V
Max. output current (input voltage 25 – 49 V)	50 mA
Max. output current (input voltage 50 – 120 V)	70 mA
Max. power consumption incl. fan (at 30 mA)	0.55 W
Max. power consumption incl. fan (at 50 mA)	0.90 W
Max. power consumption incl. fan (at 70 mA)	1.25 W
Ambient temperature ta (at lifetime 50,000 h)	-25 ... +65 °C
Dimensions L x W x H	45 x 23 x 14 mm

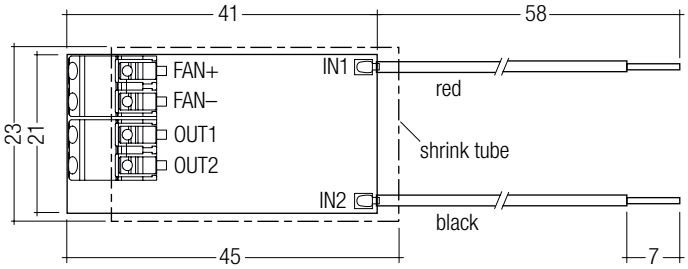

Ordering data

Type	Article number	Packaging carton	Packaging pallet	Weight per pc.
LCF 12V FAN DRIVER	**86459562**	50 pc(s).	1,200 pc(s).	0.01 kg

IP20 SELV RoHS

TALEXconverter LCI 5 W 350 mA IP20

TEC series

Product description

- Constant current LED control gear
- Universal input voltage range
- Constant output current 350 mA
- Strain relief
- Screw terminal

Properties

- Low power loss
- Overtemperature protection
- Overload protection with automatic restart
- Short-circuit shutdown feature with automatic restart
- Protection class II, SELV
- Type of protection IP20
- Plastic casing white

→ For product data sheet go to www.tridonic.com, or available on request

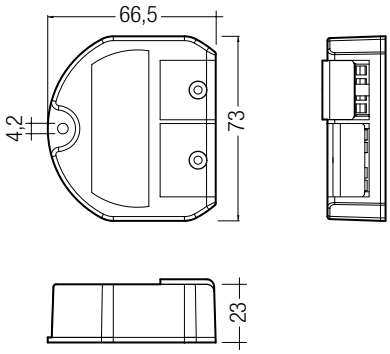

Technical data

Rated supply voltage	120 – 240 V
Input voltage, AC	108 – 264 V
Input voltage, DC	120 – 240 V
Rated current (at 230 V, 50 Hz)	0.08 A
Mains frequency	0 / 50 / 60 Hz
Efficiency	> 70 %
λ	0.37
Max. input power	7 W
Output current tolerance	± 8 %
Turn on time (output)	≤ 0.5 s
Turn off time (output)	≤ 1 s
Hold on time at power failure (output)	10 ms
Ambient temperature ta	-25 ... +50 °C
ta operating (at lifetime 50,000 h)	-25 ... +40 °C
Max. casing temperature tc	75 °C
Storage temperature ts	-30 ... +85 °C
Dimensions L x W x H	73 x 67 x 23 mm

Ordering data

Type	Article number	Packaging, carton	Packaging, pallet	Weight per pc.
LCI 005/0350 E020	**24166311**	60 pc(s).	3,600 pc(s).	0.12 kg

→

Product matrix, page 15

For standards see data sheet

Specific technical data

Type	Output current	Output voltage range
LCI 005/0350 E020	350 mA	8 – 19 V

IP20 SELV RoHS

TALEXconverter LCI 15 W 350 mA IP20

TEC series

Product description

- Constant current LED control gear
- Universal input voltage range
- Constant output current 350 mA
- Strain relief
- Screw terminal

Properties

- High efficiency
- Low power loss
- Overtemperature protection
- Overload protection with automatic restart
- Short-circuit shutdown feature with automatic restart
- Protection class II, SELV
- Type of protection IP20
- Plastic casing white

→ For product data sheet go to www.tridonic.com, or available on request

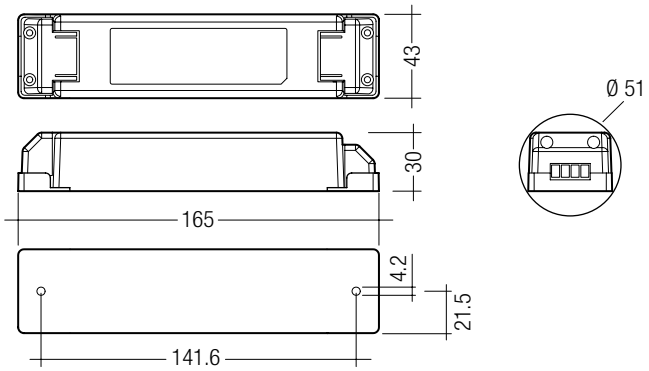

Technical data

Rated supply voltage	120 – 240 V
Input voltage, AC	108 – 264 V
Input voltage, DC	120 – 240 V
Rated current (at 230 V, 50 Hz)	0.08 A
Mains frequency	0 / 50 / 60 Hz
Efficiency	> 75 %
λ	0.91
Max. input power	17 W
Output current tolerance	± 8 %
Max. output voltage (no-load voltage)	48 V
Turn on time (output)	≤ 0.5 s
Turn off time (output)	≤ 1 s
Hold on time at power failure (output)	10 ms
Ambient temperature ta	-25 ... +50 °C
ta operating (at lifetime 50,000 h)	-25 ... +40 °C
Max. casing temperature tc	70 °C
Storage temperature ts	-30 ... +85 °C
Dimensions L x W x H	165 x 43 x 30 mm
Hole spacing D	142 mm

Ordering data

Type	Article number	Packaging, carton	Packaging, pallet	Weight per pc.
LCI 015/0350 E020	**24166312**	40 pc(s).	2,000 pc(s).	0.14 kg

Product matrix, page 15

For standards see data sheet

Specific technical data

Type	Output current	Output voltage range
LCI 015/0350 E020	350 mA	21 – 43 V

IP20 SELV RoHS

TALEXconverter LCI 15 W 700 mA IP20

TEC series

Product description

- Constant current LED control gear
- Universal input voltage range
- Constant output current 700 mA
- Strain relief
- Screw terminal

Properties

- High efficiency
- Low power loss
- Overtemperature protection
- Overload protection with automatic restart
- Short-circuit shutdown feature with automatic restart
- Protection class II, SELV
- Type of protection IP20
- Plastic casing white

→ For product data sheet go to www.tridonic.com, or available on request

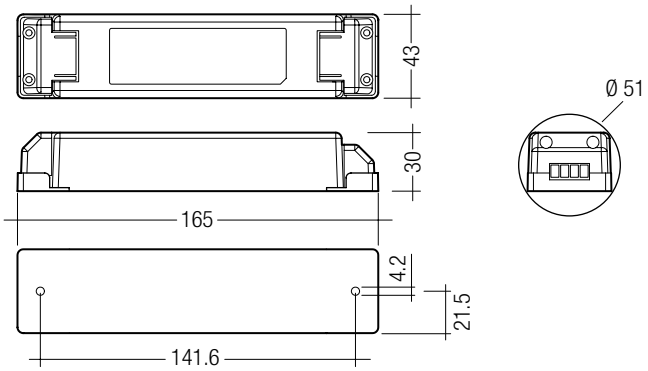

Technical data

Rated supply voltage	120 – 240 V
Input voltage, AC	108 – 264 V
Input voltage, DC	120 – 240 V
Rated current (at 230 V, 50 Hz)	0.08 A
Mains frequency	0 / 50 / 60 Hz
Efficiency	> 75 %
λ	> 0.95
Max. input power	17 W
Output current tolerance	± 8 %
Max. output voltage (no-load voltage)	30 V
Turn on time (output)	≤ 0.5 s
Turn off time (output)	≤ 1 s
Hold on time at power failure (output)	10 ms
Ambient temperature ta	-25 ... +50 °C
ta operating (at lifetime 50,000 h)	-25 ... +40 °C
Max. casing temperature tc	70 °C
Storage temperature ts	-30 ... +85 °C
Dimensions L x W x H	165 x 43 x 30 mm
Hole spacing D	142 mm

Ordering data

Type	Article number	Packaging, carton	Packaging, pallet	Weight per pc.
LCI 015/0700 E020	**24166313**	40 pc(s).	2,000 pc(s).	0.14 kg

→

Product matrix, page 15

For standards see data sheet

Specific technical data

Type	Output current	Output voltage range
LCI 015/0700 E020	700 mA	10 – 21.5 V

IP20 SELV RoHS

TALEXconverter LCI 30 W 700 mA IP20

TEC series

Product description

- Constant current LED control gear
- Universal input voltage range
- Constant output current 700 mA
- Strain relief
- Screw terminal

Properties

- High efficiency
- Low power loss
- Overtemperature protection
- Overload protection with automatic restart
- Short-circuit shutdown feature with automatic restart
- Protection class II, SELV
- Type of protection IP20
- Plastic casing white

→ For product data sheet go to www.tridonic.com, or available on request

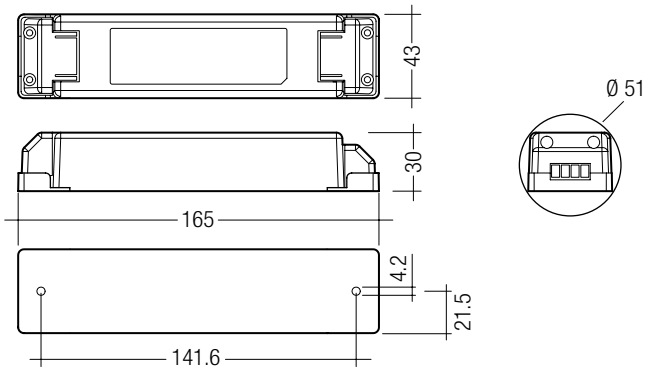

Technical data

Rated supply voltage	120 – 240 V
Input voltage, AC	108 – 264 V
Input voltage, DC	120 – 240 V
Rated current (at 230 V, 50 Hz)	0.16 A
Mains frequency	0 / 50 / 60 Hz
Efficiency	> 80 %
λ	> 0.95
Max. input power	35 W
Output power	30 W
Output current tolerance	± 8 %
Max. output voltage (no-load voltage)	48 V
Turn on time (output)	≤ 0.5 s
Turn off time (output)	≤ 1 s
Hold on time at power failure (output)	10 ms
Ambient temperature ta	-25 ... +50 °C
ta operating (at lifetime 50,000 h)	-25 ... +40 °C
Max. casing temperature tc	75 °C
Storage temperature ts	-30 ... +85 °C
Dimensions L x W x H	165 x 43 x 30 mm
Hole spacing D	142 mm

Ordering data

Type	Article number	Packaging, carton	Packaging, pallet	Weight per pc.
LCI 030/0700 E020	**24166314**	40 pc(s).	2,000 pc(s).	0.2 kg

Product matrix, page 15

For standards see data sheet

Specific technical data

Type	Output current	Output voltage range
LCI 030/0700 E020	700 mA	21 – 43 V

IP20 SELV RoHS

TALEXconverter LCI 10 W 350/500/700 mA TEC C

TEC series

Product description

- Nominal life time up to 30,000 h (at ta 50 °C with a failure rate max. 0.3 % per 1,000 h)
- 350, 500 or 700 mA output current
- Push-in terminals
- Output power 10 W
- SELV
- Type of protection IP20

Properties

- Casing: polycarbonate, white
- Compact dimensions
- Overtemperature protection
- Overload protection
- Short-circuit protection
- No-load protection

→ For product data sheet go to www.tridonic.com, or available on request

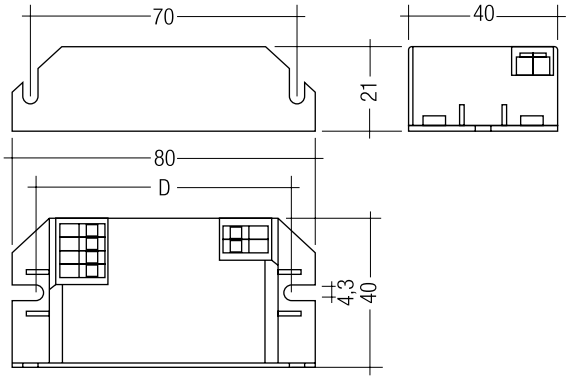

Technical data

Rated supply voltage	220 – 240 V
Input voltage, AC	198 – 264 V
Rated current (at 230 V, 50 Hz)	0.07 A
Mains frequency	50 / 60 Hz
Max. input power	12.5 W
Output power	10 W
Output current tolerance	± 7.5 %
Turn on time (at 230 V, 50 Hz, full load)	≤ 0.7 s
Turn off time (at 230 V, 50 Hz, full load)	≤ 0.7 s
Hold on time at power failure (output)	0 s
Ambient temperature ta	-20 ... +50 °C
Ambient temperature ta (at lifetime 50,000 h)	40 °C
Max. casing temperature tc	80 °C
Storage temperature ts	-40 ... +85 °C
Dimensions L x W x H	80 x 40 x 21 mm

Ordering data

Type	Article number	Packaging, carton	Packaging, low volume	Packaging, high volume	Weight per pc.
LCI 10W 350mA TEC C	**87500239**	25 pc(s).	1,100 pc(s).	7,700 pc(s).	0.072 kg
LCI 10W 500mA TEC C	**87500241**	25 pc(s).	1,100 pc(s).	7,700 pc(s).	0.059 kg
LCI 10W 700mA TEC C	**87500243**	25 pc(s).	1,100 pc(s).	7,700 pc(s).	0.060 kg

→

Product matrix, page 15

For standards see data sheet

Specific technical data

Type	Power factor at full load ①	Efficiency at full load ①	Power factor at min. load ①	Efficiency at min. load ①	Output current	Output voltage range ①	Max. output voltage ②	Typical ripple current at full load
LCI 10W 350mA TEC C	0.75C	82 %	0.7C	78 %	350 mA	13.0 – 29.0 V	33 V	± 20 %
LCI 10W 500mA TEC C	0.75C	82 %	0.7C	77 %	500 mA	9.0 – 20.0 V	27 V	± 30 %
LCI 10W 700mA TEC C	0.75C	80 %	0.7C	75 %	700 mA	6.5 – 14.5 V	21 V	± 30 %

① Test result at 230 V, 50 Hz.
② At failure mode.

IP20 SELV RoHS

TALEXconverter LCI 20 W 350/500/700 mA TEC C

TEC series

Product description

- Nominal life time up to 30,000 h (at ta 50 °C with a failure rate max. 0.3 % per 1,000 h)
- 350, 500 or 700 mA output current
- Push-in terminals
- Output power 20 W
- SELV
- Type of protection IP20

Properties

- Casing: polycarbonate, white
- Compact dimensions
- Overtemperature protection
- Overload protection
- Short-circuit protection
- No-load protection

→ For product data sheet go to www.tridonic.com, or available on request

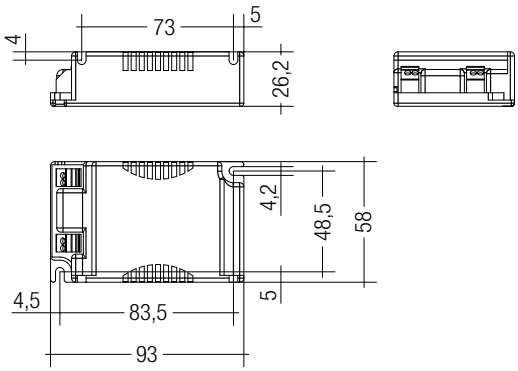

Technical data

Rated supply voltage	220 – 240 V
Input voltage, AC	198 – 264 V
Rated current (at 230 V, 50 Hz)	0.1 A
Mains frequency	50 / 60 Hz
Max. input power	24 W
Output power	20 W
THD (at 230 V, 50 Hz, full load)	< 20 %
Output current tolerance	± 7.5 %
Typical ripple current at full load	± 40 %
Turn on time (at 230 V, 50 Hz, full load)	≤ 0.7 s
Turn off time (at 230 V, 50 Hz, full load)	≤ 0.7 s
Hold on time at power failure (output)	0 s
Ambient temperature ta	-20 ... +50 °C
Ambient temperature ta (at lifetime 50,000 h)	40 °C
Max. casing temperature tc	80 °C
Storage temperature ts	-40 ... +85 °C
Dimensions L x W x H	93 x 58 x 26.2 mm

Ordering data

Type	Article number	Packaging, carton	Packaging, low volume	Packaging, high volume	Weight per pc.
LCI 20W 350mA TEC C	**87500079**	20 pc(s).	280 pc(s).	3,360 pc(s).	0.081 kg
LCI 20W 500mA TEC C	**87500188**	20 pc(s).	280 pc(s).	3,360 pc(s).	0.080 kg
LCI 20W 700mA TEC C	**87500190**	20 pc(s).	280 pc(s).	3,360 pc(s).	0.081 kg

→

Product matrix, page 15

For standards see data sheet

Specific technical data

Type	Power factor at full load ①	Efficiency at full load ①	Power factor at min. load ①	Efficiency at min. load ①	Output current	Output voltage range ①	Max. output voltage ②
LCI 20W 350mA TEC C	0.95	86 %	0.89C	83 %	350 mA	26 – 57 V	66 V
LCI 20W 500mA TEC C	0.95	86 %	0.87C	82 %	500 mA	18 – 40 V	48 V
LCI 20W 700mA TEC C	0.95	85 %	0.86C	80 %	700 mA	13 – 29 V	35 V

① Test result at 230 V, 50 Hz.
② At failure mode.

IP20 SELV RoHS

TALEXconverter LCI 35 W 350/500/700/1050 mA TEC C

TEC series

Product description

- Nominal life time up to 30,000 h (at ta 50 °C with a failure rate max. 0.3 % per 1,000 h)
- 350, 500, 700 or 1,050 mA output current
- Push-in terminals
- Output power 35 W
- SELV
- Type of protection IP20

Properties

- Casing: polycarbonate, white
- Compact dimensions
- Overtemperature protection
- Overload protection
- Short-circuit protection
- No-load protection

→ For product data sheet go to www.tridonic.com, or available on request

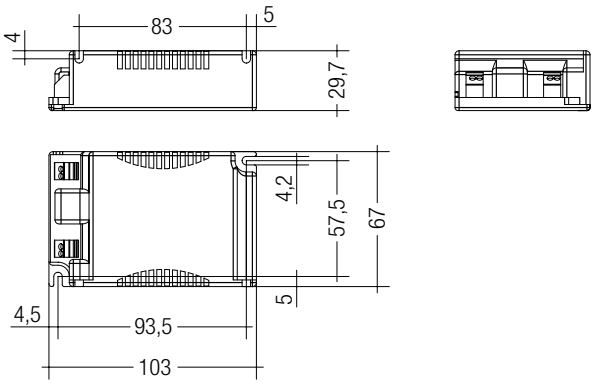

Technical data

Rated supply voltage	220 – 240 V
Input voltage, AC	198 – 264 V
Rated current (at 230 V, 50 Hz)	0.17 A
Mains frequency	50 / 60 Hz
Max. input power	41.5 W
Output power	35 W
THD (at 230 V, 50 Hz, full load)	< 20 %
Output current tolerance	± 7.5 %
Typical ripple current at full load	± 25 %
Turn on time (at 230 V, 50 Hz, full load)	≤ 0.7 s
Turn off time (at 230 V, 50 Hz, full load)	≤ 0.7 s
Hold on time at power failure (output)	0 s
Ambient temperature ta	-20 ... +50 °C
Ambient temperature ta (at lifetime 50,000 h)	40 °C
Storage temperature ts	-40 ... +85 °C
Dimensions L x W x H	103 x 67 x 29.7 mm

Ordering data

Type	Article number	Packaging, carton	Packaging, low volume	Packaging, high volume	Weight per pc.
LCI 35W 350mA TEC C	**87500192**	15 pc(s).	345 pc(s).	2,760 pc(s).	0.126 kg
LCI 35W 500mA TEC C	**87500194**	15 pc(s).	345 pc(s).	2,760 pc(s).	0.127 kg
LCI 35W 700mA TEC C	**87500196**	15 pc(s).	345 pc(s).	2,760 pc(s).	0.124 kg
LCI 35W 1050mA TEC C	**87500198**	15 pc(s).	345 pc(s).	2,760 pc(s).	0.129 kg

→

Product matrix, page 15

For standards see data sheet

Specific technical data

Type	Power factor at full load ①	Efficiency at full load ①	Power factor at min. load ①	Efficiency at min. load ①	Output current	Output voltage range ①	Max. output voltage ②	Typical ripple current at full load	Max. casing temperature tc
LCI 35W 350mA TEC C	0.98	90.0 %	0.95	88.5 %	350 mA	50.0 – 100.0 V	115 V	± 25 %	75 °C
LCI 35W 500mA TEC C	0.98	90.0 %	0.95	88.0 %	500 mA	35.0 – 70.0 V	85 V	± 25 %	80 °C
LCI 35W 700mA TEC C	0.99	89.5 %	0.96	86.5 %	700 mA	25.0 – 50.0 V	63 V	± 30 %	80 °C
LCI 35W 1050mA TEC C	0.98	88.0 %	0.94C	83.0 %	1,050 mA	16.5 – 33.5 V	44 V	± 30 %	80 °C

① Test result at 230 V, 50 Hz.
② At failure mode.

IP20 SELV RoHS

TALEXconverter LCI 42 W 900/1050 mA TEC C

TEC series

Product description

- Nominal life time up to 30,000 h (at ta 50 °C with a failure rate max. 0.3 % per 1,000 h)
- 900 or 1,050 mA output current
- Push-in terminals
- Output power 42 W
- SELV
- Type of protection IP20

Properties

- Casing: polycarbonate, white
- Compact dimensions
- Overtemperature protection
- Overload protection
- Short-circuit protection
- No-load protection

→ For product data sheet go to www.tridonic.com, or available on request

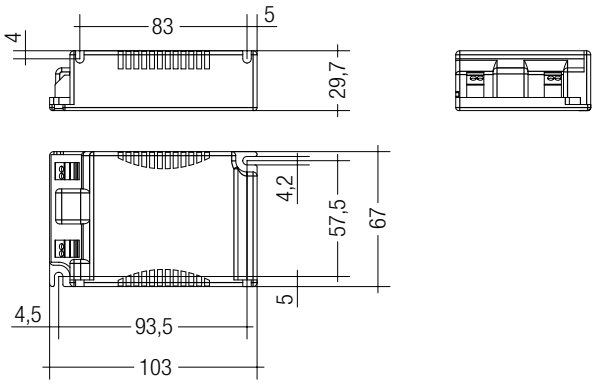

Technical data

Rated supply voltage	220 – 240 V
Input voltage, AC	198 – 264 V
Rated current (at 230 V, 50 Hz)	0.205 A
Mains frequency	50 / 60 Hz
Max. input power	48 W
Typ. output power	42 W
THD (at 230 V, 50 Hz, full load)	< 20 %
Output current tolerance	± 7.5 %
Typical ripple current at full load	± 30 %
Turn on time (at 230 V, 50 Hz, full load)	≤ 0.7 s
Turn off time (at 230 V, 50 Hz, full load)	≤ 0.7 s
Hold on time at power failure (output)	0 s
Ambient temperature ta	-20 ... +50 °C
Ambient temperature ta (at lifetime 50,000 h)	40 °C
Storage temperature ts	-40 ... +85 °C
Dimensions L x W x H	103 x 67 x 29 mm

Ordering data

Type	Article number	Packaging, carton	Packaging, low volume	Packaging, high volume	Weight per pc.
LCI 42W 900mA TEC C	**87500245**	15 pc(s).	345 pc(s).	2,760 pc(s).	0.134 kg
LCI 42W 1050mA TEC C	**87500247**	15 pc(s).	345 pc(s).	2,760 pc(s).	0.134 kg

→

Product matrix, page 15

For standards see data sheet

Specific technical data

Type	Power factor at full load ①	Efficiency at full load ①	Power factor at min. load ①	Efficiency at min. load ①	Output current	Output voltage range ①	Max. output voltage ②	Max. casing temperature tc
LCI 42W 900mA TEC C	0.98	90 %	0.95	86 %	900 mA	23 – 47 V	60 V	75 °C
LCI 42W 1050mA TEC C	0.98	90 %	0.95	85 %	1,050 mA	20 – 40 V	50 V	80 °C

① Test result at 230 V, 50 Hz.
② At failure mode.

IP20 SELV RoHS

TALEXconverter LCI 60 W 700/1050 mA TEC C

TEC series

Product description

- Nominal life time up to 30,000 h (at ta 50 °C with a failure rate max. 0.3 % per 1,000 h)
- 700 or 1,050 mA output current
- Push-in terminals
- Output power 60 W
- SELV
- Type of protection IP20

Properties

- Casing: polycarbonate, white
- Compact dimensions
- Overtemperature protection
- Overload protection
- Short-circuit protection
- No-load protection

→ For product data sheet go to www.tridonic.com, or available on request

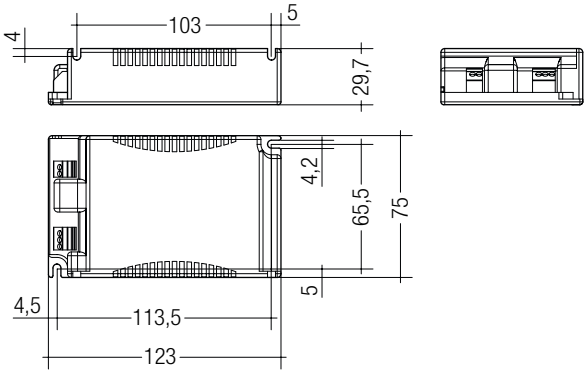

Technical data

Rated supply voltage	220 – 240 V
Input voltage, AC	198 – 264 V
Rated current (at 230 V, 50 Hz)	0.29 A
Mains frequency	50 / 60 Hz
Max. input power	70 W
Output power	60 W
THD (at 230 V, 50 Hz, full load)	< 20 %
Output current tolerance	± 7.5 %
Typical ripple current at full load	± 25 %
Turn on time (at 230 V, 50 Hz, full load)	≤ 0.7 s
Turn off time (at 230 V, 50 Hz, full load)	≤ 0.7 s
Hold on time at power failure (output)	0 s
Ambient temperature ta	-20 ... +50 °C
Ambient temperature ta (at lifetime 50,000 h)	40 °C
Storage temperature ts	-40 ... +85 °C
Dimensions L x W x H	123 x 75 x 29.7 mm

Ordering data

Type	Article number	Packaging, carton	Packaging, low volume	Packaging, high volume	Weight per pc.
LCI 60W 700mA TEC C	**87500200**	10 pc(s).	180 pc(s).	2,160 pc(s).	0.182 kg
LCI 60W 1050mA TEC C	**87500202**	10 pc(s).	180 pc(s).	2,160 pc(s).	0.187 kg

→

Product matrix, page 15

For standards see data sheet

Specific technical data

Type	Power factor at full load ①	Efficiency at full load ①	Power factor at min. load ①	Efficiency at min. load ①	Output current	Output voltage range ①	Max. output voltage ②	Max. casing temperature tc
LCI 60W 700mA TEC C	0.98	91.5 %	0.93C	90 %	700 mA	46.5 – 85.5 V	98 V	85 °C
LCI 60W 1050mA TEC C	0.98	90.5 %	0.93C	89 %	1,050 mA	31.0 – 57.0 V	62 V	95 °C

① Test result at 230 V, 50 Hz.
② At failure mode.

IP20 SELV RoHS

TALEXconverter LCI 65 W 1400/1750 mA TEC C

TEC series

Product description

- Nominal life time up to 30,000 h (at ta 50 °C with a failure rate max. 0.3 % per 1,000 h)
- 1,400 or 1,750 mA output current
- Push-in terminals
- Output power 65 W
- SELV
- Type of protection IP20

Properties

- Casing: polycarbonate, white
- Compact dimensions
- Overtemperature protection
- Overload protection
- Short-circuit protection
- No-load protection

→ For product data sheet go to www.tridonic.com, or available on request

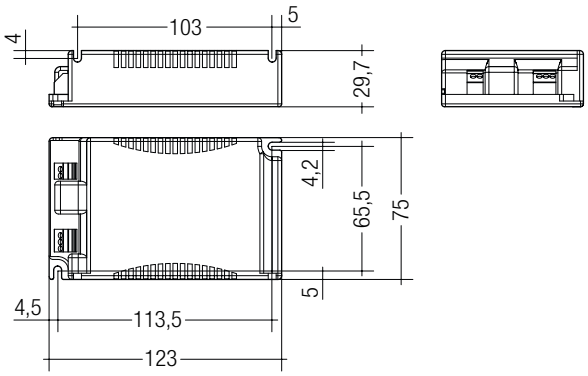

Technical data

Rated supply voltage	220 – 240 V
Input voltage, AC	198 – 264 V
Rated current (at 230 V, 50 Hz)	0.32 A
Mains frequency	50 / 60 Hz
Max. input power	75 W
Output power	65 W
THD (at 230 V, 50 Hz, full load)	< 20 %
Output current tolerance	± 7.5 %
Typical ripple current at full load	± 30 %
Turn on time (at 230 V, 50 Hz, full load)	≤ 0.7 s
Turn off time (at 230 V, 50 Hz, full load)	≤ 0.7 s
Hold on time at power failure (output)	0 s
Ambient temperature ta	-20 ... +50 °C
Ambient temperature ta (at lifetime 50,000 h)	40 °C
Max. casing temperature tc	95 °C
Storage temperature ts	-40 ... +85 °C
Dimensions L x W x H	123 x 75 x 29.7 mm

Ordering data

Type	Article number	Packaging, carton	Packaging, low volume	Packaging, high volume	Weight per pc.
LCI 65W 1400mA TEC C	**87500204**	10 pc(s).	180 pc(s).	2,160 pc(s).	0.188 kg
LCI 65W 1750mA TEC C	**87500206**	10 pc(s).	180 pc(s).	2,160 pc(s).	0.189 kg

→

Product matrix, page 15

For standards see data sheet

Specific technical data

Type	Power factor at full load ①	Efficiency at full load ①	Power factor at min. load ①	Efficiency at min. load ①	Output current	Output voltage range ①	Max. output voltage ②
LCI 65W 1400mA TEC C	0.98	90 %	0.93C	88.5 %	1,400 mA	23.0 – 46.5 V	55 V
LCI 65W 1750mA TEC C	0.98	90 %	0.93C	87.5 %	1,750 mA	18.5 – 37.0 V	43 V

① Test result at 230 V, 50 Hz.
② At failure mode.

IP20 SELV RoHS

TALEXconverter LCI 10 W 350/500/700 mA TEC SR

TEC series

Product description

- Nominal life time up to 30,000 h (at ta 50 °C with a failure rate max. 0.3 % per 1,000 h)
- 350, 500 or 700 mA output current
- Double assignment of the terminal possible
- Rapid installation of cable clamp and terminal cover, no tool required
- Connecting cable, cable cross-section 0.5 – 2.5 mm²
- Output power 10 W
- SELV
- Type of protection IP20
- LED control gear for individual luminaires

Properties

- Casing: polycarbonate, white
- Large connection compartment
- Compact dimensions
- Overtemperature protection
- Overload protection
- Short-circuit protection
- No-load protection

→ For product data sheet go to www.tridonic.com, or available on request

→

Product matrix, page 15

For standards see data sheet

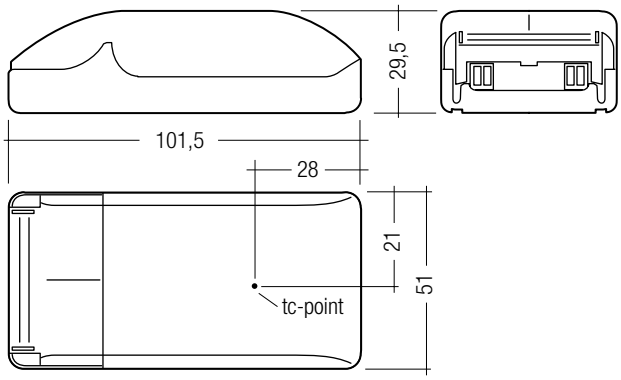

Technical data

Rated supply voltage	220 – 240 V
Input voltage, AC	198 – 264 V
Rated current (at 230 V, 50 Hz)	0.07 A
Mains frequency	50 / 60 Hz
Max. input power	12.5 W
Typ. output power	10 W
Output current tolerance	± 7.5 %
Turn on time (at 230 V, 50 Hz, full load)	≤ 0.7 s
Turn off time (at 230 V, 50 Hz, full load)	≤ 0.7 s
Hold on time at power failure	0 s
Ambient temperature ta	-20 ... +50 °C
Ambient temperature ta (at lifetime 50,000 h)	40 °C
Max. casing temperature tc	65 °C
Storage temperature ts	-40 ... +85 °C
Dimensions L x W x H	101.5 x 67 x 29.5 mm

Ordering data

Type	Article number	Packaging, carton	Packaging, low volume	Packaging, high volume	Weight per pc.
LCI 10W 350mA TEC SR	**87500240**	20 pc(s).	280 pc(s).	3,360 pc(s).	0.072 kg
LCI 10W 500mA TEC SR	**87500242**	20 pc(s).	280 pc(s).	3,360 pc(s).	0.059 kg
LCI 10W 700mA TEC SR	**87500244**	20 pc(s).	280 pc(s).	3,360 pc(s).	0.060 kg

Specific technical data

Type	Power factor at full load ①	Efficiency at full load ①	Power factor at min. load ①	Efficiency at min. load ①	Output current	Output voltage range ①	Max. output voltage ②	Typical ripple current at full load
LCI 10W 350mA TEC SR	0.75C	83 %	0.7C	79 %	350 mA	13.0 – 29.0 V	33 V	± 20 %
LCI 10W 500mA TEC SR	0.75C	82 %	0.7C	78 %	500 mA	9.0 – 20.0 V	27 V	± 25 %
LCI 10W 700mA TEC SR	0.75C	81 %	0.7C	76 %	700 mA	6.5 – 14.5 V	21 V	± 25 %

① Test result at 230 V, 50 Hz.
② At failure mode.

IP20 **SELV** RoHS

TALEXconverter LCI 20 W 350/500/700 mA TEC SR

TEC series

Product description

- Nominal life time up to 30,000 h (at ta 50 °C with a failure rate max. 0.3 % per 1,000 h)
- 350, 500 or 700 mA output current
- Cage clamp terminals for rigid and flexible wires
- Double assignment of the terminal possible
- Rapid installation of cable clamp and terminal cover, no tool required
- Connecting cable, cable cross-section 0.5 – 2.5 mm²
- Output power 20 W
- SELV
- Type of protection IP20
- LED control gear for individual luminaires

Properties

- Casing: polycarbonate, white
- Large connection compartment
- Compact dimensions
- Overtemperature protection
- Overload protection
- Short-circuit protection
- No-load protection

→ For product data sheet go to www.tridonic.com, or available on request

Product matrix, page 15

For standards see data sheet

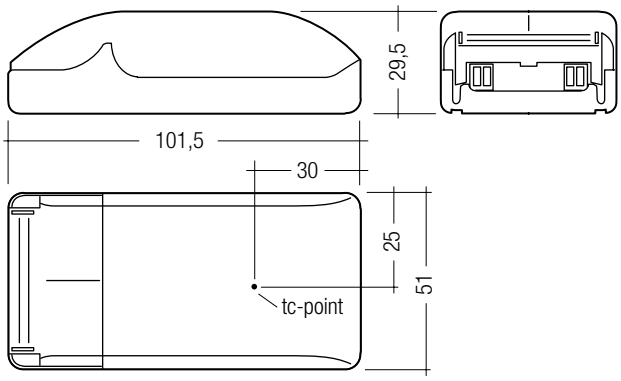

Technical data

Rated supply voltage	220 – 240 V
Input voltage, AC	198 – 264 V
Rated current (at 230 V, 50 Hz)	0.1 A
Mains frequency	50 / 60 Hz
Max. input power	24 W
Typ. output power	20 W
THD (at 230 V, 50 Hz, full load)	< 20 %
Output current tolerance	± 7.5 %
Typical ripple current at full load	± 40 %
Turn on time (at 230 V, 50 Hz, full load)	≤ 0.7 s
Turn off time (at 230 V, 50 Hz, full load)	≤ 0.7 s
Hold on time at power failure	0 s
Ambient temperature ta	-20 ... +50 °C
Ambient temperature ta (at lifetime 50,000 h)	40 °C
Max. casing temperature tc	75 °C
Storage temperature ts	-40 ... +85 °C
Dimensions L x W x H	101.5 x 51 x 29.5 mm

Ordering data

Type	Article number	Packaging, carton	Packaging, low volume	Packaging, high volume	Weight per pc.
LCI 20W 350mA TEC SR	**87500187**	20 pc(s).	280 pc(s).	3,360 pc(s).	0.084 kg
LCI 20W 500mA TEC SR	**87500189**	20 pc(s).	280 pc(s).	3,360 pc(s).	0.085 kg
LCI 20W 700mA TEC SR	**87500191**	20 pc(s).	280 pc(s).	3,360 pc(s).	0.085 kg

Specific technical data

Type	Power factor at full load ①	Efficiency at full load ①	Power factor at min. load ①	Efficiency at min. load ①	Output current	Output voltage range ①	Max. output voltage ②
LCI 20W 350mA TEC SR	0.95	86 %	0.89C	83 %	350 mA	26 – 57 V	66 V
LCI 20W 500mA TEC SR	0.95	86 %	0.87C	82 %	500 mA	18 – 40 V	46 V
LCI 20W 700mA TEC SR	0.95	85 %	0.86C	80 %	700 mA	13 – 29 V	33 V

① Test result at 230 V, 50 Hz.
② At failure mode.

IP20 SELV

TALEXconverter LCI 35 W 350/500/700/1050 mA TEC SR

TEC series

Product description

- Nominal life time up to 30,000 h (at ta 50 °C with a failure rate max. 0.3 % per 1,000 h)
- 350, 500, 700 or 1,050 mA output current
- Double assignment of the terminal possible
- Rapid installation of cable clamp and terminal cover, no tool required
- Connecting cable, cable cross-section 0.5 – 2.5 mm²
- Output power 35 W
- SELV
- Type of protection IP20
- LED control gear for individual luminaires

Properties

- Casing: polycarbonate, white
- Large connection compartment
- Compact dimensions
- Overtemperature protection
- Overload protection
- Short-circuit protection
- No-load protection

→ For product data sheet go to www.tridonic.com, or available on request

→

Product matrix, page 15

For standards see data sheet

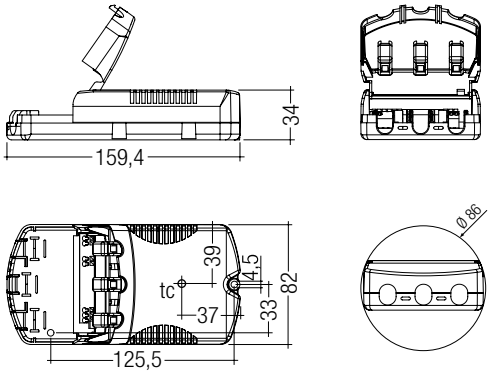

Technical data

Rated supply voltage	220 – 240 V
Input voltage, AC	198 – 264 V
Rated current (at 230 V, 50 Hz)	0.17 A
Mains frequency	50 / 60 Hz
Max. input power	41.5 W
Typ. output power	35 W
THD (at 230 V, 50 Hz, full load)	< 20 %
Output current tolerance	± 7.5 %
Turn on time (at 230 V, 50 Hz, full load)	≤ 0.7 s
Turn off time (at 230 V, 50 Hz, full load)	≤ 0.7 s
Hold on time at power failure	0 s
Ambient temperature ta	-20 ... +50 °C
Ambient temperature ta (at lifetime 50,000 h)	40 °C
Max. casing temperature tc	75 °C
Storage temperature ts	-40 ... +85 °C
Dimensions L x W x H	159.4 x 82 x 34 mm

Ordering data

Type	Article number	Packaging, carton	Packaging, low volume	Packaging, high volume	Weight per pc.
LCI 35W 350mA TEC SR	**87500193**	20 pc(s).	280 pc(s).	1,120 pc(s).	0.181 kg
LCI 35W 500mA TEC SR	**87500195**	20 pc(s).	280 pc(s).	1,120 pc(s).	0.183 kg
LCI 35W 700mA TEC SR	**87500197**	20 pc(s).	280 pc(s).	1,120 pc(s).	0.181 kg
LCI 35W 1050mA TEC SR	**87500199**	20 pc(s).	280 pc(s).	1,120 pc(s).	0.185 kg

Specific technical data

Type	Power factor at full load ①	Efficiency at full load ①	Power factor at min. load ①	Efficiency at min. load ①	Output current	Output voltage range ①	Max. output voltage ②	Typical ripple current at full load
LCI 35W 350mA TEC SR	0.98	90.0 %	0.95	88.5 %	350 mA	50.0 – 100.0 V	115 V	± 25 %
LCI 35W 500mA TEC SR	0.98	90.0 %	0.95	88.0 %	500 mA	35.0 – 70.0 V	85 V	± 25 %
LCI 35W 700mA TEC SR	0.99	89.5 %	0.96	86.5 %	700 mA	25.0 – 50.0 V	60 V	± 30 %
LCI 35W 1050mA TEC SR	0.98	88.0 %	0.94C	83.0 %	1,050 mA	16.5 – 33.5 V	40 V	± 30 %

① Test result at 230 V, 50 Hz.
② At failure mode.

IP20 **SELV** RoHS

TALEXconverter LCI 42 W 900/1050 mA TEC SR

TEC series

Product description

- Nominal life time up to 30,000 h (at ta 50 °C with a failure rate max. 0.3 % per 1,000 h)
- 900 or 1,050 mA output current
- Double assignment of the terminal possible
- Rapid installation of cable clamp and terminal cover, no tool required
- Connecting cable, cable cross-section 0.5 – 2.5 mm²
- Output power 42 W
- SELV
- Type of protection IP20
- LED control gear for individual luminaires

Properties

- Casing: polycarbonate, white
- Large connection compartment
- Compact dimensions
- Overtemperature protection
- Overload protection
- Short-circuit protection
- No-load protection

→ For product data sheet go to www.tridonic.com, or available on request

→

Product matrix, page 15

For standards see data sheet

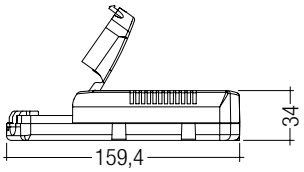

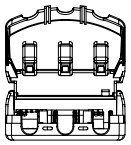

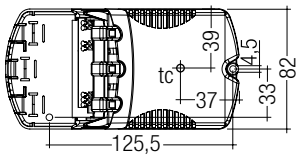

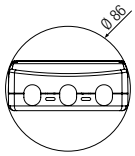

Technical data

Rated supply voltage	220 – 240 V
Input voltage, AC	198 – 264 V
Rated current (at 230 V, 50 Hz)	0.205 A
Mains frequency	50 / 60 Hz
Max. input power	48 W
Typ. output power	42 W
THD (at 230 V, 50 Hz, full load)	< 20 %
Output current tolerance	± 7.5 %
Typical ripple current at full load	± 30 %
Turn on time (at 230 V, 50 Hz, full load)	≤ 0.7 s
Turn off time (at 230 V, 50 Hz, full load)	≤ 0.7 s
Hold on time at power failure	0 s
Ambient temperature ta	-20 ... +50 °C
Ambient temperature ta (at lifetime 50,000 h)	40 °C
Storage temperature ts	-40 ... +85 °C
Dimensions L x W x H	159.4 x 82 x 34 mm

Ordering data

Type	Article number	Packaging, carton	Packaging, low volume	Packaging, high volume	Weight per pc.
LCI 42W 900mA TEC SR	**87500246**	20 pc(s).	280 pc(s).	1,120 pc(s).	0.2 kg
LCI 42W 1050mA TEC SR	**87500248**	20 pc(s).	280 pc(s).	1,120 pc(s).	0.2 kg

Specific technical data

Type	Power factor at full load ①	Efficiency at full load ①	Power factor at min. load ①	Efficiency at min. load ①	Output current	Output voltage range ①	Max. output voltage ②	Max. casing temperature tc
LCI 42W 900mA TEC SR	0.98	90 %	0.95	85 %	900 mA	23 – 47 V	60 V	75 °C
LCI 42W 1050mA TEC SR	0.98	90 %	0.95	86 %	1,050 mA	20 – 40 V	50 V	80 °C

① Test result at 230 V, 50 Hz.
② At failure mode.

IP20 SELV RoHS

TALEXconverter LCI 60 W 700/1050 mA TEC SR

TEC series

Product description

- Nominal life time up to 30,000 h (at ta 50 °C with a failure rate max. 0.3 % per 1,000 h)
- 700 or 1,050 mA output current
- Cage clamp terminals for rigid and flexible wires
- Double assignment of the terminal possible
- Rapid installation of cable clamp and terminal cover, no tool required
- Connecting cable, cable cross-section 0.5 – 2.5 mm²
- Output power 60 W
- SELV
- Type of protection IP20
- LED control gear for individual luminaires

Properties

- Casing: polycarbonate, white
- Large connection compartment
- Compact dimensions
- Overtemperature protection
- Overload protection
- Short-circuit protection
- No-load protection

→ For product data sheet go to www.tridonic.com, or available on request

→

Product matrix, page 15

For standards see data sheet

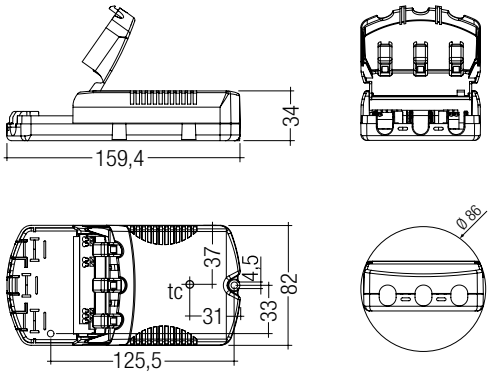

Technical data

Rated supply voltage	220 – 240 V
Input voltage, AC	198 – 264 V
Rated current (at 230 V, 50 Hz)	0.29 A
Mains frequency	50 / 60 Hz
Max. input power	70 W
Output power	60 W
THD (at 230 V, 50 Hz, full load)	< 20 %
Output current tolerance	± 7.5 %
Typical ripple current at full load	± 25 %
Turn on time (at 230 V, 50 Hz, full load)	≤ 0.7 s
Turn off time (at 230 V, 50 Hz, full load)	≤ 0.7 s
Hold on time at power failure	0 s
Ambient temperature ta	-20 ... +50 °C
Ambient temperature ta (at lifetime 50,000 h)	40 °C
Storage temperature ts	-40 ... +85 °C
Dimensions L x W x H	159.4 x 82 x 34 mm

Ordering data

Type	Article number	Packaging, carton	Packaging, low volume	Packaging, high volume	Weight per pc.
LCI 60W 700mA TEC SR	**87500201**	20 pc(s).	280 pc(s).	1,120 pc(s).	0.220 kg
LCI 60W 1050mA TEC SR	**87500203**	20 pc(s).	280 pc(s).	1,120 pc(s).	0.228 kg

Specific technical data

Type	Power factor at full load ①	Efficiency at full load ①	Power factor at min. load ①	Output current	Output voltage range ①	Max. output voltage ②	Max. casing temperature tc
LCI 60W 700mA TEC SR	0.98	91.5 %	0.93C	700 mA	46.5 – 85.5 V	98 V	80 °C
LCI 60W 1050mA TEC SR	0.98	90.5 %	0.93C	1,050 mA	31.0 – 57.0 V	62 V	85 °C

① Test result at 230 V, 50 Hz.
② At failure mode.

IP20 SELV RoHS

TALEXconverter LCI 65 W 1400/1750 mA TEC SR

TEC series

Product description

- Nominal life time up to 30,000 h (at ta 50 °C with a failure rate max. 0.3 % per 1,000 h)
- 1,400 or 1,750 mA output current
- Double assignment of the terminal possible
- Rapid installation of cable clamp and terminal cover, no tool required
- Connecting cable, cable cross-section 0.5 – 2.5 mm²
- Output power 65 W
- SELV
- Type of protection IP20
- LED control gear for individual luminaires

Properties

- Casing: polycarbonate, white
- Large connection compartment
- Compact dimensions
- Overtemperature protection
- Overload protection
- Short-circuit protection
- No-load protection

→ For product data sheet go to www.tridonic.com, or available on request

→

Product matrix, page 15

For standards see data sheet

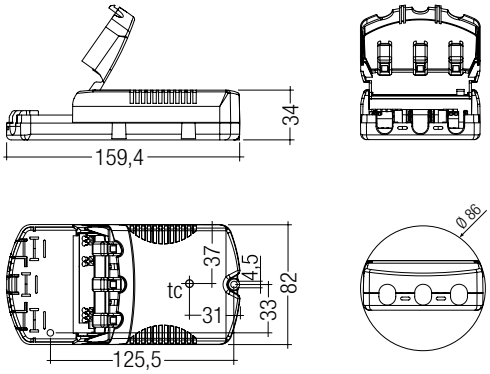

Technical data

Rated supply voltage	220 – 240 V
Input voltage, AC	198 – 264 V
Rated current (at 230 V, 50 Hz)	0.32 A
Mains frequency	50 / 60 Hz
Max. input power	75 W
Output power	65 W
THD (at 230 V, 50 Hz, full load)	< 20 %
Output current tolerance	± 7.5 %
Typical ripple current at full load	± 30 %
Turn on time (at 230 V, 50 Hz, full load)	≤ 0.7 s
Turn off time (at 230 V, 50 Hz, full load)	≤ 0.7 s
Hold on time at power failure	0 s
Ambient temperature ta	-20 ... +50 °C
Ambient temperature ta (at lifetime 50,000 h)	40 °C
Max. casing temperature tc	90 °C
Storage temperature ts	-40 ... +85 °C
Dimensions L x W x H	159.4 x 82 x 34 mm

Ordering data

Type	Article number	Packaging, carton	Packaging, low volume	Packaging, high volume	Weight per pc.
LCI 65W 1400mA TEC SR	**87500205**	20 pc(s).	280 pc(s).	1,120 pc(s).	0.227 kg
LCI 65W 1750mA TEC SR	**87500207**	20 pc(s).	280 pc(s).	1,120 pc(s).	0.228 kg

Specific technical data

Type	Power factor at full load ①	Efficiency at full load ①	Power factor at min. load ①	Efficiency at min. load ①	Output current	Output voltage range ①	Max. output voltage ②
LCI 65W 1400mA TEC SR	0.98	90 %	0.91C	88.5 %	1,400 mA	23.0 – 46.5 V	55 V
LCI 65W 1750mA TEC SR	0.98	90 %	0.94C	87.5 %	1,750 mA	18.5 – 37.0 V	43 V

① Test result at 230 V, 50 Hz.
② At failure mode.

SELV RoHS

TALEXconverter 0018 K350 DALI RGB

ECO series

Product description

- Constant current LED control gear
- 3-channel DALI dimming LED control gear
- For 350 mA LED modules
- Dimming range 0.1 to 100 %
- Precise load balancing per output channel
- With integrated sequencer for standalone operation (factory default: deactivated)
- Compact dimensions
- Overtemperature protection
- Short-circuit protection with automatic restart
- DC supply possible
- DALI control input
- 3 addressable output channels
- Screw terminal
- 6-pole ribbon cable terminal on secondary side
- Rapid installation of cable clamp and terminal cover, no tool required
- Cross-section of connecting cable: 2.5 mm²
- Connecting cable, supply side: H03VV-F, H05VV-F
- PWM signal output: 24 V DC

→ For product data sheet go to www.tridonic.com, or available on request

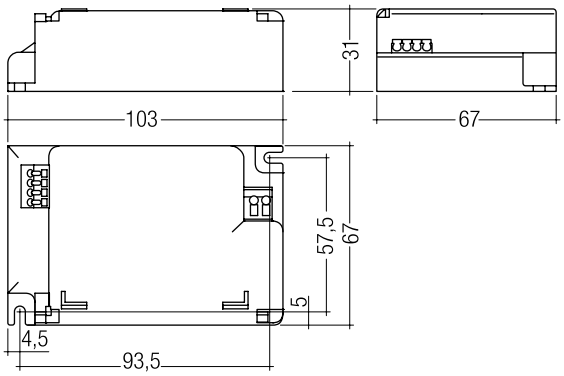

Technical data

Rated supply voltage	230 V
Input voltage, AC	198 – 254 V
Input voltage range, DC ①	200 – 240 (160) V
Mains frequency	0 / 50 / 60 Hz
Efficiency	> 82 %
Max. input power	22 W
Output power	18 W
PWM frequency	120 Hz
Max. cable length	20 m
Dimming	DALI
Ambient temperature ta	-20 ... +45 °C
Dimensions L x W x H	103 x 67 x 31 mm
Hole spacing D	91.5 – 95.5 mm

Ordering data

Type	Article number	Secondary current	Packaging, carton	Weight per pc.
0018 K350	**86458276**	350 mA	20 pc(s).	0.15 kg

① After power up with higher voltage, the device will work with a reduced voltage as specified above.

→

Product matrix, page 15

For standards see data sheet

TALEXconverter 0030 K500 one4all

ECO series

Product description

- one4all LED control gear for 500 mA output current
- Dimming curve adapted to the sensitivity of the eye
- Noise-free precise control via DALI, DSI signal or switchDIM
- Powerless switching via a digital interface (no need for switching via mains)
- Fault reporting and programmable operating parameters in DALI and DSI mode
- Thermal shutdown with temperature sensor (NTC)
- Short-circuit-proof fan output
- 2 output channels with 1 address
- Short-circuit shutdown
- No-load detection
- Intelligent Temperature Guard (overtemperature protection)
- switchDIM-MEMORY

→ For product data sheet go to www.tridonic.com, or available on request

Technical data

Rated supply voltage	220 – 240 V
Rated current (at 230 V, 50 Hz)	0.16 A
Mains frequency	0 / 50 / 60 Hz
Efficiency	> 85 %
λ	0.95
Max. input power	35 W
Max. input power (with active cooling 3 W)	39 W
Output power	2 x 15 W
PWM frequency	480 Hz
Max. output voltage	30 V
Input, temperature sensor ①	33 kΩ
Output voltage (DC) active cooling	12 V
Max. output current, active cooling ②	250 mA
Dimming	DSI, DALI, switchDIM – single momentary-action switch
Ambient temperature ta	-25 ... +45 °C
Dimensions L x W x H	141.3 x 57.5 x 30.5 mm
Hole spacing D	128.8 mm

→

Product matrix, page 15

For standards see data sheet

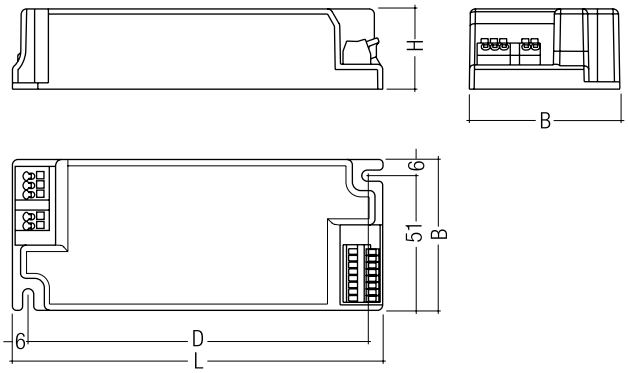

Ordering data

Type	Article number	Secondary voltage DC	Secondary current	Packaging, carton	Weight per pc.
0030 K500 one4all	**86458561**	7 – 30 V	500 mA	18 pc(s).	0.155 kg

① Further information see on data sheet.
② Max. permitted inrush current of the fan: < 6 A at 4 µs. If the inrush current is > 250 mA after 4 µs, the LED control gear switches off and will be changed into the failure mode.

IP20 RoHS

TALEXconverter LCAI 15 W 350 mA one4all

ECO series

Product description

- 1 addressable output channel
- 350 mA PWM output signal
- Short-circuit protection with automatic restart
- No-load detection with automatic restart
- Intelligent Temperature Guard (overtemperature protection)
- Connecting cable, cable cross-section 0.5 – 2.5 mm²
- Power input on standby < 1 W
- Output power 15 W
- Overload protection with automatic restart
- Strain relief

Properties

- switchDIM-MEMORY and corridorFUNCTION
- Dimming range 1 to 100 %
- Dimming curve adapted to the sensitivity of the eye
- Noise-free precise control via DALI or DSI signal, switchDIM or corridorFUNCTION
- Powerless switching via a digital interface (no need for switching via mains)
- Fault reporting and programmable operating parameters in DALI mode
- SELV

→ For product data sheet go to www.tridonic.com, or available on request

Product matrix, page 15

For standards see data sheet

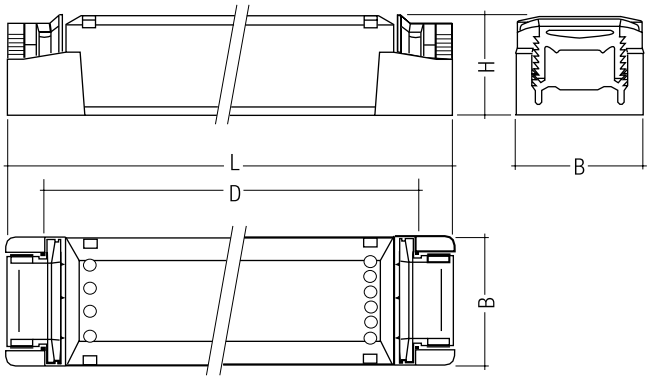

Technical data

Rated supply voltage	220 – 240 V
Input voltage, AC	198 – 264 V
Input voltage, DC	170 – 240 V
Mains frequency	0 / 50 / 60 Hz
Efficiency	> 84 %
λ (at 230 V, 50 Hz)	0.6
Max. input power	19 W
Dimming range	1 – 100 %
PWM frequency	400 Hz
THD (applying to the current)	–
Control input dimming	DSI, DALI, switchDIM
Stand-by power at 230 V	0.77 W
Output power	15 W
Output power range (without dimming operation)	1 – 15 W
Set up time at 230 V (acc. to the DALI standard)	< 600 ms
Turn off time at full load	30 ms
Turn off time at 3 V	< 300 ms
ta operating (at lifetime 50,000 h)	-25 ... +50 °C
ta operating (at lifetime 25,000 h)	-25 ... +60 °C
Max. casing temperature tc	80 °C
Storage temperature ts	-25 ... +60 °C
Dimensions L x W x H	167 x 42 x 31 mm
Hole spacing D	143 – 148 mm

Ordering data

Type	Article number	Packaging, carton	Packaging, pallet	Weight per pc.
LCAI 015/0350 A020 one4all	**86458899**	20 pc(s).	800 pc(s).	0.121 kg

IP20 **SELV** N416 RoHS

TALEXconverter LCAI 20 W 500 mA one4all

ECO series

Product description

- Constant current LED control gear
- 1 addressable output channel
- 500 mA PWM output signal
- Short-circuit protection with automatic restart
- No-load safe with automatic restart
- Intelligent Temperature Guard (overtemperature protection)
- Connecting cable, cable cross-section 0.5 – 2.5 mm²
- Power input on standby < 1 W
- Output power 20 W
- Strain relief
- Plastic casing white

Properties

- Dimming range 1 to 100 %
- Dimming curve adapted to the sensitivity of the eye
- Noise-free precise control via DALI, DSI signal or switchDIM
- switchDIM (with memory function)
- corridorFUNCTION
- Powerless switching via a digital interface (no need for switching via mains)
- Fault reporting and programmable operating parameters in DALI mode
- SELV

→ For product data sheet go to www.tridonic.com, or available on request

→

Product matrix, page 15

For standards see data sheet

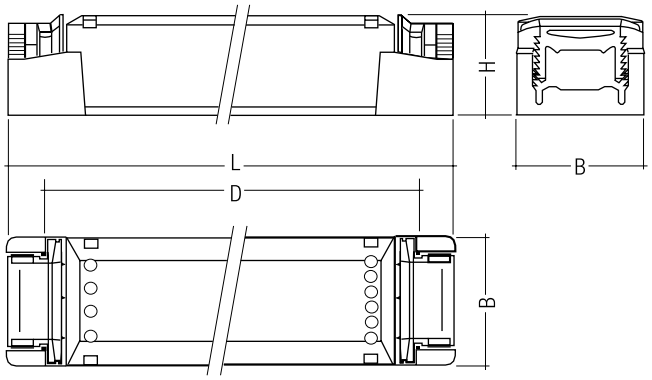

Technical data

Rated supply voltage	220 – 240 V
Input voltage, AC	198 – 264 V
Input voltage, DC	170 – 264 V
Mains frequency	0 / 50 / 60 Hz
Rated current (at 230 V, 50 Hz)	0.11 A
Max. input power	25 W
Efficiency	> 85 %
λ (at 230 V, 50 Hz)	0.95
Dimming range	1 – 100 %
PWM frequency	400 Hz
Control input dimming	DSI, DALI, switchDIM
Stand-by power at 230 V	< 1 W
Output power	20 W
Set up time at 230 V (acc. to the DALI standard)	< 600 ms
Ambient temperature ta (at lifetime 50,000 h)	-25 ... +55 °C
Max. casing temperature tc	93 °C
Dimensions L x W x H	207 x 42 x 31 mm
Hole spacing D	183 – 188 mm

Ordering data

Type	Article number	Packaging, carton	Packaging, pallet	Weight per pc.
LCAI 020/0500 A120 one4all	**86459107**	25 pc(s).	750 pc(s).	0.168 kg

IP20 RoHS

TALEXconverter LCAI 30 W 700 mA one4all

ECO series

Product description

- 1 addressable output channel
- 700 mA PWM output signal
- Short-circuit protection with automatic restart
- No-load detection with automatic restart
- Intelligent Temperature Guard (overtemperature protection)
- Connecting cable, cable cross-section 0.5 – 2.5 mm²
- Power input on standby < 1 W
- Output power 30 W
- Overload protection with automatic restart
- Strain relief

Properties

- switchDIM-MEMORY and corridorFUNCTION
- Dimming range 1 to 100 %
- Dimming curve adapted to the sensitivity of the eye
- Noise-free precise control via DALI, DSI signal or switchDIM
- Powerless switching via a digital interface (no need for switching via mains)
- Fault reporting and programmable operating parameters in DALI mode
- SELV

→ For product data sheet go to www.tridonic.com, or available on request

→

Product matrix, page 15

For standards see data sheet

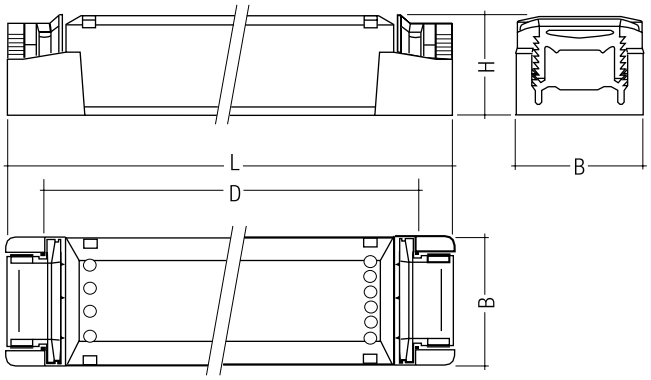

Technical data

Rated supply voltage	220 – 240 V
Input voltage, AC	198 – 264 V
Input voltage, DC	170 – 240 V
Mains frequency	0 / 50 / 60 Hz
Rated current (at 230 V, 50 Hz)	0.16 A
Efficiency	> 83 %
λ (at 230 V, 50 Hz)	0.96
Max. input power	36 W
Dimming range	1 – 100 %
PWM frequency	400 Hz
THD (applying to the current)	9 %
Control input dimming	DSI, DALI, switchDIM
Stand-by power at 230 V	0.73 W
Output power	30 W
Output power range (without dimming operation)	2 – 30 W
Set up time at 230 V (acc. to the DALI standard)	< 600 ms
Turn off time at full load	20 ms
Turn off time at 3 V	< 300 ms
ta operating (at lifetime 50,000 h)	-25 ... +40 °C
ta operating (at lifetime 25,000 h)	–
Max. casing temperature tc	90 °C
Storage temperature ts	-25 ... +60 °C
Dimensions L x W x H	207 x 42 x 31 mm
Hole spacing D	183 – 188 mm

Ordering data

Type	Article number	Packaging, carton	Packaging, pallet	Weight per pc.
LCAI 030/0700 A120 one4all	**86458900**	25 pc(s).	750 pc(s).	0.168 kg

IP20 SELV RoHS

NEW

TALEXconverter LCAI 10 W 150mA–400mA ECO C

ECO series

Product description

- Dimmable built-in control gear for LED
- Constant current LED control gear
- Output current adjustable between 150 – 400 mA
- Max. output power 10 W
- Nominal life of 55,000 h (at ta 70 °C with a failure rate ≤ 0.2 % per 1,000 h)
- 5-year guarantee
- Dimming range 1 to 100 %

Properties

- Casing: polycarbonate, white
- Type of protection IP20

Interfaces

- DALI DEVICE Type 6
- DSI
- switchDIM (with memory function)
- corridorFUNCTION
- Input temperature sensor for LED control

Functions

- Adjustable output current (I-select resistor or DALI)
- Power-up fading at AC
- Intelligent Temperature Guard (overtemperature protection)
- Short-circuit protection
- Overload protection
- Constant Light Output function
- Suitable for emergency lighting units acc. to EN 50172

→ For product data sheet go to www.tridonic.com, or available on request

Product matrix, page 15

For standards see data sheet

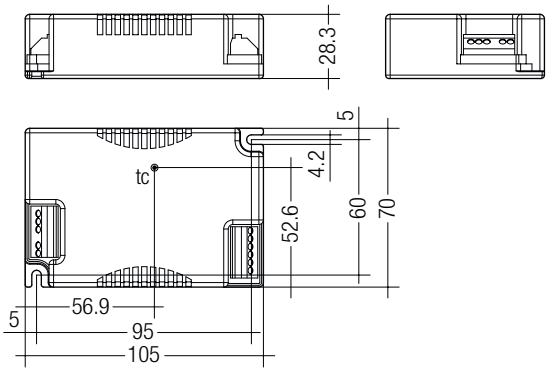

Technical data

Rated supply voltage	220 – 240 V
Input voltage, AC	198 – 264 V
Input voltage, DC	176 – 280 V
Mains frequency	0 / 50 / 60 Hz
Typ. current (at 230 V, 50 Hz, full load) ① ②	45 – 60 mA
Typ. current (220 V, 0 Hz, full load, 15 % dimming level) ②	10 – 16 mA
Leakage current (PE)	< 0.5 mA
Max. input power	15 W
Typ. efficiency (at 230 V 50 Hz, full load) ②	80 – 83 %
λ (at 230 V, 50 Hz, full load) ①	> 0.85
Typ. power input on standby ③	120 – 140 mW
THD (at 230 V, 50 Hz, full load)	< 30 %
Time to light (at 230 V, 50 Hz, full load, acc. to DALI)	< 0.6 s
Time to light (DC mode)	< 0.4 s
Switchover time (AC/DC)	< 0.4 s
Turn off time (at 230 V, 50 Hz, full load)	< 50 ms
Hold on time (at 230 V, 50 Hz, full load) ④	15 ms
Output current tolerance ①	± 3 %
Output current ripple	± 15 %
Max. output current peak	≤ output current + 18 %
PWM frequency ⑤	500 Hz
Dimming range	1 – 100 %
Max. output voltage	60 V
Dimensions L x W x H	105 x 70 x 28.3 mm

Ordering data

Type	Article number	Packaging, carton	Packaging, pallet	Weight per pc.
LCAI 10W 150mA-400mA ECO C	**28000130**	10 pc(s).	960 pc(s).	0.136 kg

Specific technical data

Type	Output current	Min. forward voltage	Max. forward voltage ⑥	Max. output power ⑥	Typ. power consumption (at 230 V, 50 Hz, full load)	Typ. current consumption (at 230 V, 50 Hz, full load)	tc point max.	Ambient temperature ta	I-select resistor value
LCAI 10W 150mA-400mA ECO C	150 mA	23 V	50 V	7.5 W	9.2 W	47 mA	80 °C	-25 ... 70 °C	open
LCAI 10W 150mA-400mA ECO C	175 mA	23 V	50 V	8.8 W	10.6 W	53 mA	80 °C	-25 ... 70 °C	63.40 kΩ
LCAI 10W 150mA-400mA ECO C	200 mA	23 V	50 V	10.0 W	12.0 W	58 mA	80 °C	-25 ... 70 °C	54.90 kΩ
LCAI 10W 150mA-400mA ECO C	225 mA	20 V	44 V	10.0 W	12.0 W	59 mA	80 °C	-25 ... 70 °C	47.50 kΩ
LCAI 10W 150mA-400mA ECO C	250 mA	18 V	40 V	10.0 W	12.1 W	59 mA	80 °C	-25 ... 70 °C	40.20 kΩ
LCAI 10W 150mA-400mA ECO C	275 mA	16 V	36 V	10.0 W	12.1 W	59 mA	80 °C	-25 ... 70 °C	34.00 kΩ
LCAI 10W 150mA-400mA ECO C	300 mA	15 V	33 V	10.0 W	12.1 W	59 mA	80 °C	-25 ... 70 °C	27.40 kΩ
LCAI 10W 150mA-400mA ECO C	325 mA	14 V	31 V	10.0 W	12.1 W	59 mA	80 °C	-25 ... 70 °C	22.00 kΩ
LCAI 10W 150mA-400mA ECO C	350 mA	13 V	29 V	10.0 W	12.3 W	59 mA	80 °C	-25 ... 70 °C	12.00 kΩ
LCAI 10W 150mA-400mA ECO C	375 mA	12 V	27 V	10.0 W	12.3 W	59 mA	80 °C	-25 ... 70 °C	6.19 kΩ
LCAI 10W 150mA-400mA ECO C	400 mA	11 V	25 V	10.0 W	12.3 W	60 mA	80 °C	-25 ... 70 °C	short circuit (0 Ω)

① Valid at 100 % dimming level.
② Depending on the selected output current.
③ Depending on the DALI traffic at the interface.
④ At power failure.
⑤ ± 20 %.
⑥ At full load.

ACCES-SORIES

I-SELECT PLUG

Product description

- Ready-for-use resistor to set output current value
- Resistor is base isolated
- Resistor power 0.25 W
- Resistor value tolerance ± 1 %

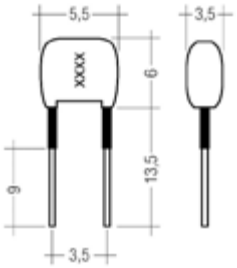

Ordering data

Type	Article number	Colour	Marking	Resistor value	Packaging, bag	Weight per pc.
I-SELECT PLUG MAX GR	**28000274**	Grey	MAX	0.0 kΩ	10 pc(s).	0.001 kg
I-SELECT PLUG 300mA BL	**28000275**	Blue	0300	27.4 kΩ	10 pc(s).	0.001 kg
I-SELECT PLUG 350mA BL	**28000276**	Blue	0350	12.0 kΩ	10 pc(s).	0.001 kg

IP20 SELV RoHS

NEW

TALEXconverter LCAI 10 W 350mA–900mA ECO C

ECO series

Product description

- Dimmable built-in control gear for LED
- Constant current LED control gear
- Output current adjustable between 350 – 900 mA
- Max. output power 12 W
- Nominal life of 50,000 h (at ta 65 °C with a failure rate ≤ 0.2 % per 1,000 h)
- 5-year guarantee
- Dimming range 1 to 100 %

Properties

- Casing: polycarbonate, white
- Type of protection IP20

Interfaces

- DALI DEVICE Type 6
- DSI
- switchDIM (with memory function)
- corridorFUNCTION
- Input temperature sensor for LED control

Functions

- Adjustable output current (I-select resistor or DALI)
- Power-up fading at AC
- Intelligent Temperature Guard (overtemperature protection)
- Short-circuit protection
- Overload protection
- Constant Light Output function
- Suitable for emergency lighting units acc. to EN 50172

→ For product data sheet go to www.tridonic.com, or available on request

Product matrix, page 15

For standards see data sheet

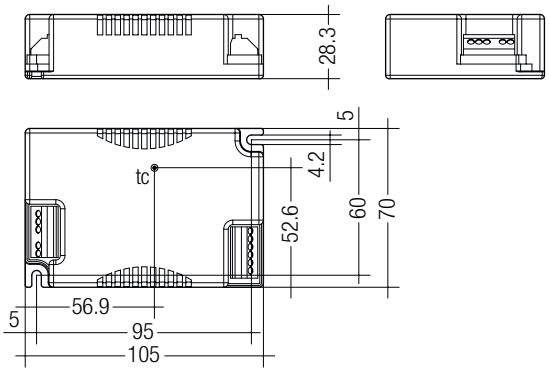

Technical data

Rated supply voltage	220 – 240 V
Input voltage, AC	198 – 264 V
Input voltage, DC	176 – 280 V
Mains frequency	0 / 50 / 60 Hz
Typ. current (at 230 V, 50 Hz, full load) ① ②	62 – 80 mA
Typ. current (220 V, 0 Hz, full load, 15 % dimming level) ②	10 – 16 mA
Leakage current (PE)	< 0.5 mA
Max. input power	15 W
Typ. efficiency (at 230 V 50 Hz, full load) ②	78 – 82 %
λ (at 230 V, 50 Hz, full load) ①	> 0.9
Typ. power input on standby ③	120 – 140 mW
THD (at 230 V, 50 Hz, full load)	< 30 %
Time to light (at 230 V, 50 Hz, full load, acc. to DALI)	< 0.6 s
Time to light (DC mode)	< 0.4 s
Switchover time (AC/DC)	< 0.4 s
Turn off time (at 230 V, 50 Hz, full load)	< 50 ms
Hold on time (at 230 V, 50 Hz, full load) ④	15 ms
Output current tolerance ①	± 3 %
Output current ripple	± 15 %
Max. output current peak	≤ output current + 18 %
PWM frequency ⑤	500 Hz
Dimming range	1 – 100 %
Max. output voltage	60 V
Dimensions L x W x H	105 x 70 x 28.3 mm

Ordering data

Type	Article number	Packaging, carton	Packaging, pallet	Weight per pc.
LCAI 10W 350mA-900mA ECO C	**28000131**	10 pc(s).	960 pc(s).	0.136 kg

Specific technical data

Type	Output current	Min. forward voltage	Max. forward voltage ⑥	Max. output power ⑥	Typ. power consumtption (at 230 V, 50 Hz, full load)	Typ. current consumption (at 230 V, 50 Hz, full load)	tc point max.	Ambient temperature ta	I-select resistor value
LCAI 10W 350mA-900mA ECO C	350 mA	15 V	34 V	12 W	14.4 W	70 mA	80 °C	-25 ... 65 °C	open
LCAI 10W 350mA-900mA ECO C	375 mA	14 V	32 V	12 W	14.8 W	69 mA	80 °C	-25 ... 65 °C	71.50 kΩ
LCAI 10W 350mA-900mA ECO C	400 mA	14 V	30 V	12 W	14.8 W	70 mA	80 °C	-25 ... 65 °C	66.50 kΩ
LCAI 10W 350mA-900mA ECO C	425 mA	13 V	28 V	12 W	14.8 W	70 mA	80 °C	-25 ... 65 °C	61.90 kΩ
LCAI 10W 350mA-900mA ECO C	450 mA	12 V	27 V	12 W	14.9 W	70 mA	80 °C	-25 ... 65 °C	57.60 kΩ
LCAI 10W 350mA-900mA ECO C	475 mA	11 V	25 V	12 W	14.9 W	69 mA	80 °C	-25 ... 65 °C	53.60 kΩ
LCAI 10W 350mA-900mA ECO C	500 mA	11 V	24 V	12 W	14.9 W	70 mA	80 °C	-25 ... 65 °C	49.90 kΩ
LCAI 10W 350mA-900mA ECO C	525 mA	10 V	23 V	12 W	14.9 W	70 mA	80 °C	-25 ... 65 °C	45.30 kΩ
LCAI 10W 350mA-900mA ECO C	550 mA	10 V	22 V	12 W	14.9 W	70 mA	80 °C	-25 ... 65 °C	42.20 kΩ
LCAI 10W 350mA-900mA ECO C	575 mA	9 V	21 V	12 W	14.9 W	71 mA	80 °C	-25 ... 65 °C	38.30 kΩ
LCAI 10W 350mA-900mA ECO C	600 mA	9 V	20 V	12 W	14.9 W	70 mA	80 °C	-25 ... 65 °C	35.70 kΩ
LCAI 10W 350mA-900mA ECO C	625 mA	9 V	19 V	12 W	14.9 W	70 mA	80 °C	-25 ... 65 °C	32.40 kΩ
LCAI 10W 350mA-900mA ECO C	650 mA	8 V	18 V	12 W	15.0 W	70 mA	80 °C	-25 ... 65 °C	28.70 kΩ
LCAI 10W 350mA-900mA ECO C	675 mA	8 V	18 V	12 W	15.0 W	70 mA	80 °C	-25 ... 65 °C	26.10 kΩ
LCAI 10W 350mA-900mA ECO C	700 mA	8 V	17 V	12 W	15.0 W	71 mA	80 °C	-25 ... 65 °C	22.00 kΩ
LCAI 10W 350mA-900mA ECO C	725 mA	7 V	17 V	12 W	15.0 W	71 mA	80 °C	-25 ... 65 °C	17.40 kΩ
LCAI 10W 350mA-900mA ECO C	750 mA	7 V	16 V	12 W	15.1 W	71 mA	80 °C	-25 ... 65 °C	15.00 kΩ
LCAI 10W 350mA-900mA ECO C	775 mA	7 V	15 V	12 W	15.1 W	71 mA	80 °C	-25 ... 65 °C	12.40 kΩ
LCAI 10W 350mA-900mA ECO C	800 mA	7 V	15 V	12 W	15.0 W	70 mA	80 °C	-25 ... 65 °C	10.00 kΩ
LCAI 10W 350mA-900mA ECO C	825 mA	7 V	15 V	12 W	15.0 W	70 mA	80 °C	-25 ... 65 °C	7.68 kΩ
LCAI 10W 350mA-900mA ECO C	850 mA	7 V	14 V	12 W	15.0 W	70 mA	80 °C	-25 ... 65 °C	5.36 kΩ
LCAI 10W 350mA-900mA ECO C	875 mA	7 V	14 V	12 W	14.9 W	70 mA	80 °C	-25 ... 65 °C	3.16 kΩ
LCAI 10W 350mA-900mA ECO C	900 mA	7 V	13 V	12 W	14.9 W	70 mA	80 °C	-25 ... 65 °C	short circuit (0 Ω)

① Valid at 100 % dimming level.
② Depending on the selected output current.
③ Depending on the DALI traffic at the interface.
④ At power failure.
⑤ ± 20 %.
⑥ At full load.

ACCES-SORIES

I-SELECT PLUG

Product description

- Ready-for-use resistor to set output current value
- Resistor is base isolated
- Resistor power 0.25 W
- Resistor value tolerance ± 1 %

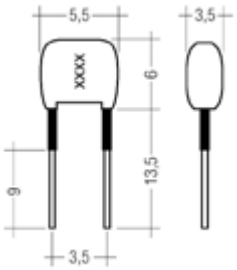

Ordering data

Type	Article number	Colour	Marking	Resistor value	Packaging, bag	Weight per pc.
I-SELECT PLUG MAX GR	**28000274**	Grey	MAX	0.0 kΩ	10 pc(s).	0.001 kg
I-SELECT PLUG 500mA GN	**28000277**	Green	0500	49.9 kΩ	10 pc(s).	0.001 kg
I-SELECT PLUG 700mA GN	**28000278**	Green	0700	22.0 kΩ	10 pc(s).	0.001 kg

IP20 SELV RoHS

NEW

TALEXconverter LCAI 20 W 350mA–900mA ECO C

ECO series

Product description

- Dimmable built-in control gear for LED
- Constant current LED control gear
- Output current adjustable between 350 – 900 mA
- Max. output power 20 W
- Nominal life of 50,000 h (at ta max. with a failure rate ≤ 0.2 % per 1,000 h)
- 5-year guarantee
- Dimming range 1 to 100 %

Properties

- Casing: polycarbonate, white
- Type of protection IP20

Interfaces

- DALI DEVICE Type 6
- DSI
- switchDIM (with memory function)
- corridorFUNCTION
- Input temperature sensor for LED control

Functions

- Adjustable output current (I-select resistor or DALI)
- Power-up fading at AC
- Intelligent Temperature Guard (overtemperature protection)
- Short-circuit protection
- Overload protection
- Constant Light Output function
- Suitable for emergency lighting units acc. to EN 50172

→ For product data sheet go to www.tridonic.com, or available on request

Product matrix, page 15

For standards see data sheet

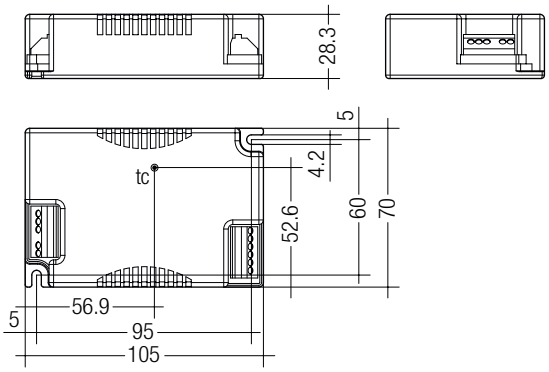

Technical data

Rated supply voltage	220 – 240 V
Input voltage, AC	198 – 264 V
Input voltage, DC	176 – 280 V
Mains frequency	0 / 50 / 60 Hz
Typ. current (at 230 V, 50 Hz, full load) ① ②	88 – 105 mA
Typ. current (220 V, 0 Hz, full load, 15 % dimming level)	22 – 26 mA
Leakage current (PE)	< 0.5 mA
Max. input power	25 W
Typ. efficiency (at 230 V 50 Hz, full load) ②	84 – 86 %
λ (at 230 V, 50 Hz, full load) ①	> 0.96
Typ. power input on standby ③	120 – 140 mW
THD (at 230 V, 50 Hz, full load)	< 20 %
Time to light (at 230 V, 50 Hz, full load, acc. to DALI)	< 0.6 s
Time to light (DC mode)	< 0.4 s
Switchover time (AC/DC)	< 0.4 s
Turn off time (at 230 V, 50 Hz, full load)	< 50 ms
Hold on time (at 230 V, 50 Hz, full load) ④	15 ms
Output current tolerance ①	± 3 %
Output current ripple	± 15 %
Max. output current peak	≤ output current + 18 %
PWM frequency ⑤	500 Hz
Dimming range	1 – 100 %
Max. output voltage	60 V
Dimensions L x W x H	105 x 70 x 28.3 mm

Ordering data

Type	Article number	Packaging, carton	Packaging, pallet	Weight per pc.
LCAI 20W 350mA-900mA ECO C	28000122	10 pc(s).	960 pc(s).	0.136 kg

Specific technical data

Type	Output current	Min. forward voltage	Max. forward voltage ⑥	Max. output power ⑥	Typ. power consumtption (at 230 V, 50 Hz, full load)	Typ. current consumption (at 230 V, 50 Hz, full load)	tc point max.	Ambient temperature ta	I-select resistor value
LCAI 20W 350mA-900mA ECO C	350 mA	22 V	50.0 V	17.5 W	20.3 W	88 mA	85 °C	-25 ... 60 °C	open
LCAI 20W 350mA-900mA ECO C	375 mA	22 V	50.0 V	18.8 W	21.9 W	95 mA	85 °C	-25 ... 60 °C	71.50 kΩ
LCAI 20W 350mA-900mA ECO C	400 mA	22 V	50.0 V	20.0 W	23.1 W	100 mA	85 °C	-25 ... 60 °C	66.50 kΩ
LCAI 20W 350mA-900mA ECO C	425 mA	21 V	47.5 V	20.0 W	23.1 W	100 mA	85 °C	-25 ... 60 °C	61.90 kΩ
LCAI 20W 350mA-900mA ECO C	450 mA	20 V	45.0 V	20.0 W	23.0 W	100 mA	85 °C	-25 ... 60 °C	57.60 kΩ
LCAI 20W 350mA-900mA ECO C	475 mA	18 V	42.5 V	20.0 W	22.9 W	100 mA	85 °C	-25 ... 60 °C	53.60 kΩ
LCAI 20W 350mA-900mA ECO C	500 mA	18 V	40.5 V	20.0 W	23.5 W	102 mA	85 °C	-25 ... 60 °C	49.90 kΩ
LCAI 20W 350mA-900mA ECO C	525 mA	17 V	38.5 V	20.0 W	23.5 W	102 mA	85 °C	-25 ... 60 °C	45.30 kΩ
LCAI 20W 350mA-900mA ECO C	550 mA	16 V	36.5 V	20.0 W	23.5 W	102 mA	85 °C	-25 ... 60 °C	42.20 kΩ
LCAI 20W 350mA-900mA ECO C	575 mA	15 V	35.0 V	20.0 W	23.5 W	102 mA	85 °C	-25 ... 60 °C	38.30 kΩ
LCAI 20W 350mA-900mA ECO C	600 mA	15 V	33.5 V	20.0 W	23.5 W	102 mA	85 °C	-25 ... 60 °C	35.70 kΩ
LCAI 20W 350mA-900mA ECO C	625 mA	14 V	32.5 V	20.0 W	23.5 W	102 mA	85 °C	-25 ... 60 °C	32.40 kΩ
LCAI 20W 350mA-900mA ECO C	650 mA	13 V	31.0 V	20.0 W	23.5 W	102 mA	85 °C	-25 ... 60 °C	28.70 kΩ
LCAI 20W 350mA-900mA ECO C	675 mA	13 V	30.0 V	20.0 W	23.5 W	102 mA	85 °C	-25 ... 60 °C	26.10 kΩ
LCAI 20W 350mA-900mA ECO C	700 mA	12 V	29.0 V	20.0 W	23.7 W	103 mA	85 °C	-25 ... 60 °C	22.00 kΩ
LCAI 20W 350mA-900mA ECO C	725 mA	12 V	28.0 V	20.0 W	23.7 W	103 mA	85 °C	-25 ... 60 °C	17.40 kΩ
LCAI 20W 350mA-900mA ECO C	750 mA	12 V	27.0 V	20.0 W	23.7 W	103 mA	85 °C	-25 ... 60 °C	15.00 kΩ
LCAI 20W 350mA-900mA ECO C	775 mA	11 V	26.0 V	20.0 W	23.7 W	103 mA	85 °C	-25 ... 60 °C	12.40 kΩ
LCAI 20W 350mA-900mA ECO C	800 mA	11 V	25.5 V	20.0 W	23.8 W	103 mA	85 °C	-25 ... 60 °C	10.00 kΩ
LCAI 20W 350mA-900mA ECO C	825 mA	10 V	24.5 V	20.0 W	23.8 W	103 mA	85 °C	-25 ... 60 °C	7.68 kΩ
LCAI 20W 350mA-900mA ECO C	850 mA	10 V	24.0 V	20.0 W	24.0 W	104 mA	85 °C	-25 ... 60 °C	5.36 kΩ
LCAI 20W 350mA-900mA ECO C	875 mA	10 V	23.5 V	20.0 W	24.0 W	104 mA	85 °C	-25 ... 60 °C	3.16 kΩ
LCAI 20W 350mA-900mA ECO C	900 mA	10 V	22.5 V	20.0 W	24.1 W	105 mA	85 °C	-25 ... 60 °C	short circuit (0 Ω)

① Valid at 100 % dimming level.
② Depending on the selected output current.
③ Depending on the DALI traffic at the interface.
④ At power failure.
⑤ ± 20 %.
⑥ At full load.

ACCES-SORIES

I-SELECT PLUG

Product description

- Ready-for-use resistor to set output current value
- Resistor is base isolated
- Resistor power 0.25 W
- Resistor value tolerance ± 1 %

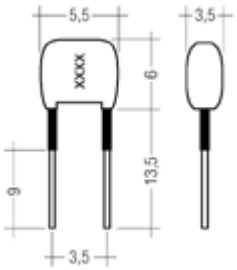

Ordering data

Type	Article number	Colour	Marking	Resistor value	Packaging, bag	Weight per pc.
I-SELECT PLUG MAX GR	28000274	Grey	MAX	0.0 kΩ	10 pc(s).	0.001 kg
I-SELECT PLUG 500mA GN	28000277	Green	0500	49.9 kΩ	10 pc(s).	0.001 kg
I-SELECT PLUG 700mA GN	28000278	Green	0700	22.0 kΩ	10 pc(s).	0.001 kg

IP20 SELV RoHS

NEW

TALEXconverter LCAI 35 W 350mA–900mA ECO C

ECO series

Product description

- Dimmable built-in control gear for LED
- Constant current LED control gear
- Output current adjustable between 350 – 900 mA
- Max. output power 35 W
- Nominal life of 50,000 h (at ta max. with a failure rate ≤ 0.2 % per 1,000 h)
- 5-year guarantee
- Dimming range 1 to 100 %

Properties

- Casing: polycarbonate, white
- Type of protection IP20

Interfaces

- DALI DEVICE Type 6
- DSI
- switchDIM (with memory function)
- corridorFUNCTION
- Input temperature sensor for LED control

Functions

- Adjustable output current (I-select resistor or DALI)
- Power-up fading at AC
- Intelligent Temperature Guard (overtemperature protection)
- Short-circuit protection
- Overload protection
- Constant Light Output function
- Suitable for emergency lighting units acc. to EN 50172

→ For product data sheet go to www.tridonic.com, or available on request

Product matrix, page 15

For standards see data sheet

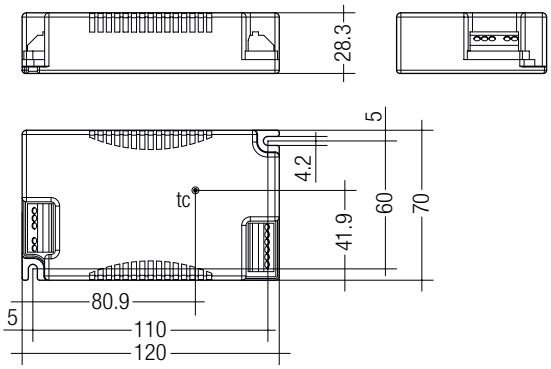

Technical data

Rated supply voltage	220 – 240 V
Input voltage, AC	198 – 264 V
Input voltage, DC	176 – 280 V
Mains frequency	0 / 50 / 60 Hz
Typ. current (at 230 V, 50 Hz, full load) ① ②	130 – 185 mA
Typ. current (220 V, 0 Hz, full load, 15 % dimming level) ②	32 – 36 mA
Leakage current (PE)	< 0.35 mA
Max. input power	41 W
Typ. efficiency (at 230 V 50 Hz, full load) ②	87 – 90 %
λ (at 230 V, 50 Hz, full load) ①	≥ 0.98
Typ. power input on standby ③	70 – 100 mW
THD (at 230 V, 50 Hz, full load)	< 5 %
Time to light (at 230 V, 50 Hz, full load, acc. to DALI)	< 0.2 s
Time to light (DC mode)	< 0.2 s
Switchover time (AC/DC)	< 0.2 s
Turn off time (at 230 V, 50 Hz, full load)	< 20 ms
Hold on time (at 230 V, 50 Hz, full load) ④	< 14 ms
Output current tolerance ①	± 3 %
Output current ripple	± 15 %
Max. output current peak	≤ output current + 18 %
PWM frequency ⑤	500 Hz
Dimming range	1 – 100 %
Max. output voltage	120 V
Dimensions L x W x H	120 x 70 x 28.3 mm

Ordering data

Type	Article number	Packaging, carton	Packaging, pallet	Weight per pc.
LCAI 35W 350mA-900mA ECO C	**28000124**	10 pc(s).	960 pc(s).	0.171 kg

Specific technical data

Type	Output current	Min. forward voltage	Max. forward voltage ⑥	Max. output power ⑥	Typ. power consumption (at 230 V, 50 Hz, full load)	Typ. current consumption (at 230 V, 50 Hz, full load)	tc point max.	Ambient temperature ta	I-select resistor value
LCAI 35W 350mA-900mA ECO C	350 mA	40 V	90.0 V	31.5 W	35.0 W	152 mA	80 °C	-25 ... 60 °C	open
LCAI 35W 350mA-900mA ECO C	375 mA	40 V	90.0 V	33.8 W	37.6 W	163 mA	80 °C	-25 ... 60 °C	71.50 kΩ
LCAI 35W 350mA-900mA ECO C	400 mA	39 V	88.0 V	35.0 W	37.9 W	165 mA	80 °C	-25 ... 60 °C	66.50 kΩ
LCAI 35W 350mA-900mA ECO C	425 mA	37 V	82.5 V	35.0 W	38.2 W	167 mA	80 °C	-25 ... 60 °C	61.90 kΩ
LCAI 35W 350mA-900mA ECO C	450 mA	35 V	78.0 V	35.0 W	38.6 W	169 mA	80 °C	-25 ... 60 °C	57.60 kΩ
LCAI 35W 350mA-900mA ECO C	475 mA	33 V	74.0 V	35.0 W	38.9 W	170 mA	80 °C	-25 ... 60 °C	53.60 kΩ
LCAI 35W 350mA-900mA ECO C	500 mA	31 V	70.5 V	35.0 W	39.2 W	172 mA	80 °C	-25 ... 60 °C	49.90 kΩ
LCAI 35W 350mA-900mA ECO C	525 mA	30 V	67.0 V	35.0 W	39.3 W	173 mA	80 °C	-25 ... 60 °C	45.30 kΩ
LCAI 35W 350mA-900mA ECO C	550 mA	28 V	64.0 V	35.0 W	39.4 W	173 mA	80 °C	-25 ... 60 °C	42.20 kΩ
LCAI 35W 350mA-900mA ECO C	575 mA	27 V	61.0 V	35.0 W	39.4 W	174 mA	80 °C	-25 ... 60 °C	38.30 kΩ
LCAI 35W 350mA-900mA ECO C	600 mA	26 V	58.5 V	35.0 W	39.5 W	175 mA	80 °C	-25 ... 60 °C	35.70 kΩ
LCAI 35W 350mA-900mA ECO C	625 mA	25 V	56.5 V	35.0 W	39.6 W	175 mA	80 °C	-25 ... 60 °C	32.40 kΩ
LCAI 35W 350mA-900mA ECO C	650 mA	24 V	54.0 V	35.0 W	39.7 W	176 mA	80 °C	-25 ... 60 °C	28.70 kΩ
LCAI 35W 350mA-900mA ECO C	675 mA	23 V	52.0 V	35.0 W	39.7 W	176 mA	80 °C	-25 ... 60 °C	26.10 kΩ
LCAI 35W 350mA-900mA ECO C	700 mA	22 V	50.5 V	35.0 W	39.8 W	177 mA	80 °C	-25 ... 60 °C	22.00 kΩ
LCAI 35W 350mA-900mA ECO C	725 mA	21 V	48.5 V	35.0 W	39.9 W	178 mA	80 °C	-25 ... 60 °C	17.40 kΩ
LCAI 35W 350mA-900mA ECO C	750 mA	21 V	47.0 V	35.0 W	40.0 W	179 mA	80 °C	-25 ... 60 °C	15.00 kΩ
LCAI 35W 350mA-900mA ECO C	775 mA	20 V	45.5 V	35.0 W	40.1 W	180 mA	80 °C	-25 ... 60 °C	12.40 kΩ
LCAI 35W 350mA-900mA ECO C	800 mA	19 V	44.0 V	35.0 W	40.3 W	181 mA	80 °C	-25 ... 60 °C	10.00 kΩ
LCAI 35W 350mA-900mA ECO C	825 mA	19 V	42.5 V	35.0 W	40.4 W	182 mA	80 °C	-25 ... 60 °C	7.68 kΩ
LCAI 35W 350mA-900mA ECO C	850 mA	18 V	41.5 V	35.0 W	40.5 W	183 mA	80 °C	-25 ... 60 °C	5.36 kΩ
LCAI 35W 350mA-900mA ECO C	875 mA	17 V	40.5 V	35.0 W	40.6 W	184 mA	80 °C	-25 ... 60 °C	3.16 kΩ
LCAI 35W 350mA-900mA ECO C	900 mA	17 V	39.0 V	35.0 W	40.7 W	185 mA	80 °C	-25 ... 60 °C	short circuit (0 Ω)

① Valid at 100 % dimming level.
② Depending on the selected output current.
③ Depending on the DALI traffic at the interface.
④ At power failure.
⑤ ± 20 %.
⑥ At full load.

ACCES-SORIES

I-SELECT PLUG

Product description

- Ready-for-use resistor to set output current value
- Resistor is base isolated
- Resistor power 0.25 W
- Resistor value tolerance ± 1 %

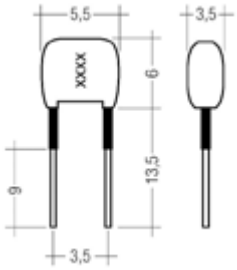

Ordering data

Type	Article number	Colour	Marking	Resistor value	Packaging, bag	Weight per pc.
I-SELECT PLUG MAX GR	**28000274**	Grey	MAX	0.0 kΩ	10 pc(s).	0.001 kg
I-SELECT PLUG 500mA GN	**28000277**	Green	0500	49.9 kΩ	10 pc(s).	0.001 kg
I-SELECT PLUG 700mA GN	**28000278**	Green	0700	22.0 kΩ	10 pc(s).	0.001 kg

ACCES-SORIES

LCF 12V FAN DRIVER

Product description

- Fan driver module with 12.4 V output voltage
- Drives the fan permanently (independent of the optional temperature sensor)
- Connection: stranded wires 0.2 mm², stripped wire endings twisted and tin-plated
- Max. output power of the LED control gear will be reduced by the power consumption of the fan and LCF 12V FAN DRIVER

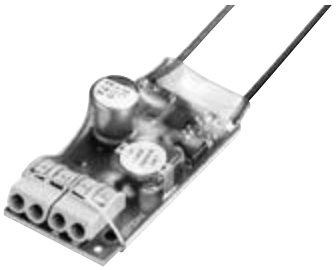

Technical data

Input voltage, DC	25 – 120 V
Output voltage DC	12.4 V
Max. output current (input voltage 25 – 49 V)	50 mA
Max. output current (input voltage 50 – 120 V)	70 mA
Max. power consumption incl. fan (at 30 mA)	0.55 W
Max. power consumption incl. fan (at 50 mA)	0.90 W
Max. power consumption incl. fan (at 70 mA)	1.25 W
Ambient temperature ta (at lifetime 50,000 h)	-25 ... +65 °C
Dimensions L x W x H	45 x 23 x 14 mm

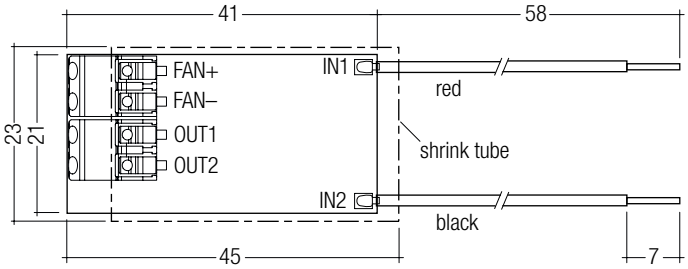

Ordering data

Type	Article number	Packaging carton	Packaging pallet	Weight per pc.
LCF 12V FAN DRIVER	**86459562**	50 pc(s).	1,200 pc(s).	0.01 kg

IP20 SELV RoHS

NEW

TALEXconverter LCAI 35 W 900mA–1750mA ECO C

ECO series

Product description

- Dimmable built-in control gear for LED
- Constant current LED control gear
- Output current adjustable between 900 – 1,750 mA
- Max. output power 35 W
- Nominal life of 50,000 h (at ta max. with a failure rate ≤ 0.2 % per 1,000 h)
- 5-year guarantee
- Dimming range 1 to 100 %

Properties

- Casing: polycarbonate, white
- Type of protection IP20

Interfaces

- DALI DEVICE Type 6
- DSI
- switchDIM (with memory function)
- corridorFUNCTION
- Input temperature sensor for LED control

Functions

- Adjustable output current (I-select resistor or DALI)
- Power-up fading at AC
- Intelligent Temperature Guard (overtemperature protection)
- Short-circuit protection
- Overload protection
- Constant Light Output function
- Suitable for emergency lighting units acc. to EN 50172

→ For product data sheet go to www.tridonic.com, or available on request

→

Product matrix, page 15

For standards see data sheet

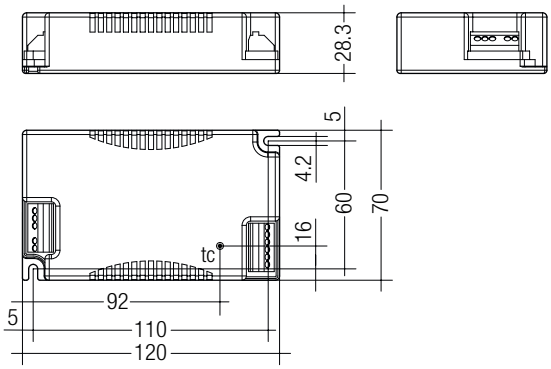

Technical data

Rated supply voltage	220 – 240 V
Input voltage, AC	198 – 264 V
Input voltage, DC	176 – 280 V
Mains frequency	0 / 50 / 60 Hz
Typ. current (at 230 V, 50 Hz, full load) ① ②	173 – 184 mA
Typ. current (220 V, 0 Hz, full load, 15 % dimming level) ②	32 – 37 mA
Leakage current (PE)	< 0.3 mA
Max. input power	42 W
Typ. efficiency (at 230 V 50 Hz, full load) ②	85 – 88 %
λ (at 230 V, 50 Hz, full load) ①	≥ 0.98
Typ. power input on standby ③	70 – 100 mW
THD (at 230 V, 50 Hz, full load)	< 5 %
Time to light (at 230 V, 50 Hz, full load, acc. to DALI)	< 0.2 s
Time to light (DC mode)	< 0.2 s
Switchover time (AC/DC)	< 0.2 s
Turn off time (at 230 V, 50 Hz, full load)	< 20 ms
Hold on time (at 230 V, 50 Hz, full load) ④	< 14 ms
Output current tolerance ①	± 3 %
Output current ripple	± 15 %
Max. output current peak	≤ output current + 18 %
PWM frequency ⑤	500 Hz
Dimming range	1 – 100 %
Max. output voltage	60 V
Dimensions L x W x H	120 x 70 x 28.3 mm

Ordering data

Type	Article number	Packaging, carton	Packaging, pallet	Weight per pc.
LCAI 35W 900mA-1750mA ECO C	**28000126**	10 pc(s).	960 pc(s).	0.176 kg

Specific technical data

Type	Output current	Min. forward voltage	Max. forward voltage ⑥	Max. output power ⑥	Typ. power consumption (at 230 V, 50 Hz, full load)	Typ. current consumption (at 230 V, 50 Hz, full load)	tc point max.	Ambient temperature ta	I-select resistor value
LCAI 35W 900mA-1750mA ECO C	900 mA	17 V	39.0 V	35 W	39.9 W	173 mA	80 °C	-25 ... 60 °C	open
LCAI 35W 900mA-1750mA ECO C	950 mA	16 V	37.0 V	35 W	40.0 W	174 mA	80 °C	-25 ... 60 °C	69.80 kΩ
LCAI 35W 900mA-1750mA ECO C	1,000 mA	15 V	35.0 V	35 W	40.1 W	174 mA	80 °C	-25 ... 60 °C	64.90 kΩ
LCAI 35W 900mA-1750mA ECO C	1,050 mA	14 V	33.5 V	35 W	40.2 W	175 mA	80 °C	-25 ... 55 °C	56.00 kΩ
LCAI 35W 900mA-1750mA ECO C	1,100 mA	14 V	32.0 V	35 W	40.3 W	175 mA	80 °C	-25 ... 55 °C	47.50 kΩ
LCAI 35W 900mA-1750mA ECO C	1,150 mA	13 V	30.5 V	35 W	40.3 W	175 mA	80 °C	-25 ... 55 °C	43.20 kΩ
LCAI 35W 900mA-1750mA ECO C	1,200 mA	12 V	29.5 V	35 W	40.4 W	175 mA	80 °C	-25 ... 55 °C	40.20 kΩ
LCAI 35W 900mA-1750mA ECO C	1,250 mA	12 V	28.0 V	35 W	40.4 W	176 mA	80 °C	-25 ... 55 °C	36.50 kΩ
LCAI 35W 900mA-1750mA ECO C	1,300 mA	12 V	27.0 V	35 W	40.5 W	176 mA	80 °C	-25 ... 55 °C	32.40 kΩ
LCAI 35W 900mA-1750mA ECO C	1,350 mA	11 V	26.0 V	35 W	40.5 W	176 mA	80 °C	-25 ... 55 °C	28.70 kΩ
LCAI 35W 900mA-1750mA ECO C	1,400 mA	11 V	25.0 V	35 W	40.6 W	176 mA	80 °C	-25 ... 55 °C	22.00 kΩ
LCAI 35W 900mA-1750mA ECO C	1,450 mA	10 V	24.5 V	35 W	40.6 W	177 mA	80 °C	-25 ... 55 °C	17.80 kΩ
LCAI 35W 900mA-1750mA ECO C	1,500 mA	10 V	23.5 V	35 W	40.7 W	177 mA	85 °C	-25 ... 55 °C	15.00 kΩ
LCAI 35W 900mA-1750mA ECO C	1,550 mA	10 V	23.0 V	35 W	40.8 W	177 mA	85 °C	-25 ... 55 °C	12.10 kΩ
LCAI 35W 900mA-1750mA ECO C	1,600 mA	9 V	22.0 V	35 W	40.9 W	178 mA	85 °C	-25 ... 55 °C	9.31 kΩ
LCAI 35W 900mA-1750mA ECO C	1,650 mA	9 V	21.5 V	35 W	41.0 W	178 mA	85 °C	-25 ... 55 °C	6.49 kΩ
LCAI 35W 900mA-1750mA ECO C	1,700 mA	9 V	21.0 V	35 W	41.1 W	179 mA	85 °C	-25 ... 55 °C	3.83 kΩ
LCAI 35W 900mA-1750mA ECO C	1,750 mA	9 V	20.0 V	35 W	41.2 W	179 mA	85 °C	-25 ... 55 °C	short circuit (0 Ω)

① Valid at 100 % dimming level.
② Depending on the selected output current.
③ Depending on the DALI traffic at the interface.
④ At power failure.
⑤ ± 20 %.
⑥ At full load.

ACCES-SORIES

I-SELECT PLUG

Product description

- Ready-for-use resistor to set output current value
- Resistor is base isolated
- Resistor power 0.25 W
- Resistor value tolerance ± 1 %

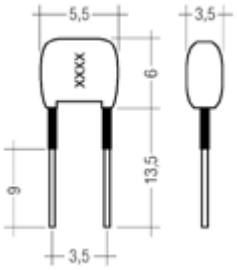

Ordering data

Type	Article number	Colour	Marking	Resistor value	Packaging, bag	Weight per pc.
I-SELECT PLUG MAX GR	**28000274**	Grey	MAX	0.0 kΩ	10 pc(s).	0.001 kg
I-SELECT PLUG 1050mA BR	**28000279**	Brown	1050	56.0 kΩ	10 pc(s).	0.001 kg
I-SELECT PLUG 1400mA BR	**28000280**	Brown	1400	22.0 kΩ	10 pc(s).	0.001 kg

ACCES-SORIES

LCF 12V FAN DRIVER

Product description

- Fan driver module with 12.4 V output voltage
- Drives the fan permanently (independent of the optional temperature sensor)
- Connection: stranded wires 0.2 mm², stripped wire endings twisted and tin-plated
- Max. output power of the LED control gear will be reduced by the power consumption of the fan and LCF 12V FAN DRIVER

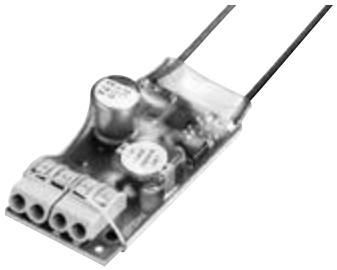

Technical data

Input voltage, DC	25 – 120 V
Output voltage DC	12.4 V
Max. output current (input voltage 25 – 49 V)	50 mA
Max. output current (input voltage 50 – 120 V)	70 mA
Max. power consumption incl. fan (at 30 mA)	0.55 W
Max. power consumption incl. fan (at 50 mA)	0.90 W
Max. power consumption incl. fan (at 70 mA)	1.25 W
Ambient temperature ta (at lifetime 50,000 h)	-25 ... +65 °C
Dimensions L x W x H	45 x 23 x 14 mm

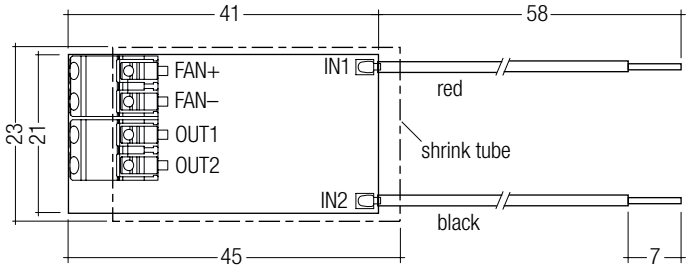

Ordering data

Type	Article number	Packaging carton	Packaging pallet	Weight per pc.
LCF 12V FAN DRIVER	**86459562**	50 pc(s).	1,200 pc(s).	0.01 kg

IP20 SELV RoHS

NEW

TALEXconverter LCAI 55 W 900mA–1750mA ECO C

ECO series

Product description

- Dimmable built-in control gear for LED
- Constant current LED control gear
- Output current adjustable between 900 – 1,750 mA
- Max. output power 55 W
- Nominal life of 50,000 h (at ta max. with a failure rate ≤ 0.2 % per 1,000 h)
- 5-year guarantee
- Dimming range 1 to 100 %

Properties

- Casing: polycarbonate, white
- Type of protection IP20

Interfaces

- DALI DEVICE Type 6
- DSI
- switchDIM (with memory function)
- corridorFUNCTION
- Input temperature sensor for LED control

Functions

- Adjustable output current (I-select resistor or DALI)
- Power-up fading at AC
- Intelligent Temperature Guard (overtemperature protection)
- Short-circuit protection
- Overload protection
- Constant Light Output function
- Suitable for emergency lighting units acc. to EN 50172

→ For product data sheet go to www.tridonic.com, or available on request

Product matrix, page 15

For standards see data sheet

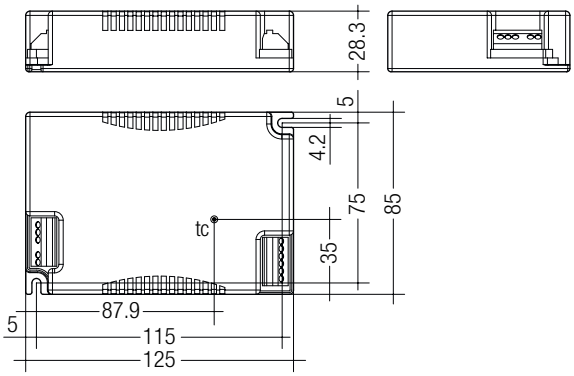

Technical data

Rated supply voltage	220 – 240 V
Input voltage, AC	198 – 264 V
Input voltage, DC	176 – 280 V
Mains frequency	0 / 50 / 60 Hz
Typ. current (at 230 V, 50 Hz, full load) ① ②	210 – 290 mA
Typ. current (220 V, 0 Hz, full load, 15 % dimming level) ②	38 – 51 mA
Leakage current (PE)	< 0.3 mA
Max. input power	64 W
Typ. efficiency (at 230 V 50 Hz, full load) ②	88 – 90 %
λ (at 230 V, 50 Hz, full load) ①	≥ 0.98
Typ. power input on standby ③	70 – 100 mW
THD (at 230 V, 50 Hz, full load)	< 5 %
Time to light (at 230 V, 50 Hz, full load, acc. to DALI)	< 0.2 s
Time to light (DC mode)	< 0.2 s
Switchover time (AC/DC)	< 0.2 s
Turn off time (at 230 V, 50 Hz, full load)	< 20 ms
Hold on time (at 230 V, 50 Hz, full load) ④	< 14 ms
Output current tolerance ①	± 3 %
Output current ripple	± 15 %
Max. output current peak	≤ output current + 18 %
PWM frequency ⑤	500 Hz
Dimming range	1 – 100 %
Max. output voltage	60 V
Dimensions L x W x H	125 x 85 x 28.3 mm

Ordering data

Type	Article number	Packaging, carton	Packaging, pallet	Weight per pc.
LCAI 55W 900mA-1750mA ECO C	**28000128**	10 pc(s).	580 pc(s).	0.203 kg

Specific technical data

Type	Output current	Min. forward voltage	Max. forward voltage ⑥	Max. output power ⑥	Typ. power consumption (at 230 V, 50 Hz, full load)	Typ. current consumption (at 230 V, 50 Hz, full load)	tc point max.	Ambient temperature ta	I-select resistor value
LCAI 55W 900mA-1750mA ECO C	900 mA	21 V	48.0 V	43.2 W	48.5 W	211 mA	80 °C	-25 ... 55 °C	open
LCAI 55W 900mA-1750mA ECO C	950 mA	21 V	48.0 V	45.6 W	51.2 W	223 mA	80 °C	-25 ... 55 °C	69.80 kΩ
LCAI 55W 900mA-1750mA ECO C	1,000 mA	21 V	48.0 V	48.0 W	53.9 W	234 mA	80 °C	-25 ... 55 °C	64.90 kΩ
LCAI 55W 900mA-1750mA ECO C	1,050 mA	21 V	48.0 V	50.4 W	56.6 W	246 mA	80 °C	-25 ... 55 °C	56.00 kΩ
LCAI 55W 900mA-1750mA ECO C	1,100 mA	21 V	48.0 V	52.8 W	59.3 W	258 mA	80 °C	-25 ... 55 °C	47.50 kΩ
LCAI 55W 900mA-1750mA ECO C	1,150 mA	21 V	48.0 V	55.0 W	62.0 W	270 mA	80 °C	-25 ... 55 °C	43.20 kΩ
LCAI 55W 900mA-1750mA ECO C	1,200 mA	20 V	46.0 V	55.0 W	62.0 W	270 mA	80 °C	-25 ... 50 °C	40.20 kΩ
LCAI 55W 900mA-1750mA ECO C	1,250 mA	20 V	44.0 V	55.0 W	61.8 W	269 mA	80 °C	-25 ... 50 °C	36.50 kΩ
LCAI 55W 900mA-1750mA ECO C	1,300 mA	19 V	42.5 V	55.0 W	62.1 W	270 mA	80 °C	-25 ... 50 °C	32.40 kΩ
LCAI 55W 900mA-1750mA ECO C	1,350 mA	18 V	41.0 V	55.0 W	62.2 W	270 mA	80 °C	-25 ... 50 °C	28.70 kΩ
LCAI 55W 900mA-1750mA ECO C	1,400 mA	18 V	39.5 V	55.0 W	62.1 W	270 mA	80 °C	-25 ... 50 °C	22.00 kΩ
LCAI 55W 900mA-1750mA ECO C	1,450 mA	17 V	38.0 V	55.0 W	61.9 W	269 mA	80 °C	-25 ... 50 °C	17.80 kΩ
LCAI 55W 900mA-1750mA ECO C	1,500 mA	16 V	37.0 V	55.0 W	62.4 W	271 mA	80 °C	-25 ... 50 °C	15.00 kΩ
LCAI 55W 900mA-1750mA ECO C	1,550 mA	16 V	35.5 V	55.0 W	61.8 W	269 mA	80 °C	-25 ... 50 °C	12.10 kΩ
LCAI 55W 900mA-1750mA ECO C	1,600 mA	15 V	34.5 V	55.0 W	62.0 W	270 mA	80 °C	-25 ... 50 °C	9.31 kΩ
LCAI 55W 900mA-1750mA ECO C	1,650 mA	15 V	33.5 V	55.0 W	62.1 W	270 mA	80 °C	-25 ... 50 °C	6.49 kΩ
LCAI 55W 900mA-1750mA ECO C	1,700 mA	14 V	32.5 V	55.0 W	62.1 W	270 mA	80 °C	-25 ... 50 °C	3.83 kΩ
LCAI 55W 900mA-1750mA ECO C	1,750 mA	14 V	31.5 V	55.0 W	61.9 W	269 mA	80 °C	-25 ... 50 °C	short circuit (0 Ω)

① Valid at 100 % dimming level.
② Depending on the selected output current.
③ Depending on the DALI traffic at the interface.
④ At power failure.
⑤ ± 20 %.
⑥ At full load.

ACCES-SORIES

I-SELECT PLUG

Product description

- Ready-for-use resistor to set output current value
- Resistor is base isolated
- Resistor power 0.25 W
- Resistor value tolerance ± 1 %

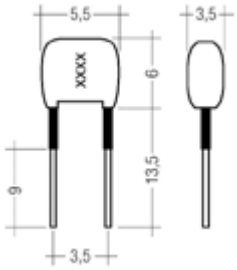

Ordering data

Type	Article number	Colour	Marking	Resistor value	Packaging, bag	Weight per pc.
I-SELECT PLUG MAX GR	**28000274**	Grey	MAX	0.0 kΩ	10 pc(s).	0.001 kg
I-SELECT PLUG 1050mA BR	**28000279**	Brown	1050	56.0 kΩ	10 pc(s).	0.001 kg
I-SELECT PLUG 1400mA BR	**28000280**	Brown	1400	22.0 kΩ	10 pc(s).	0.001 kg

ACCES-SORIES

LCF 12V FAN DRIVER

Product description

- Fan driver module with 12.4 V output voltage
- Drives the fan permanently (independent of the optional temperature sensor)
- Connection: stranded wires 0.2 mm², stripped wire endings twisted and tin-plated
- Max. output power of the LED control gear will be reduced by the power consumption of the fan and LCF 12V FAN DRIVER

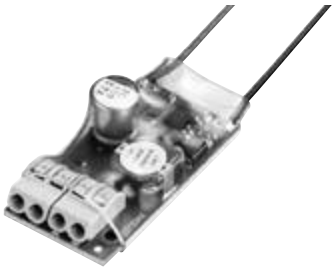

Technical data

Input voltage, DC	25 – 120 V
Output voltage DC	12.4 V
Max. output current (input voltage 25 – 49 V)	50 mA
Max. output current (input voltage 50 – 120 V)	70 mA
Max. power consumption incl. fan (at 30 mA)	0.55 W
Max. power consumption incl. fan (at 50 mA)	0.90 W
Max. power consumption incl. fan (at 70 mA)	1.25 W
Ambient temperature ta (at lifetime 50,000 h)	-25 ... +65 °C
Dimensions L x W x H	45 x 23 x 14 mm

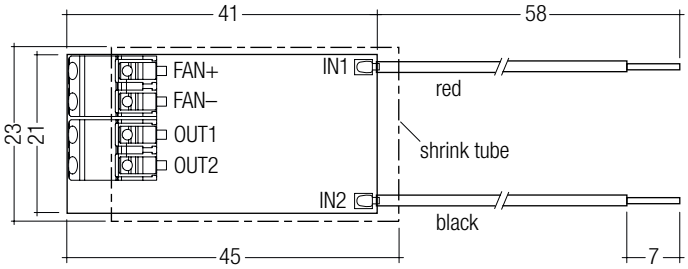

Ordering data

Type	Article number	Packaging carton	Packaging pallet	Weight per pc.
LCF 12V FAN DRIVER	**86459562**	50 pc(s).	1,200 pc(s).	0.01 kg

IP20 SELV RoHS

NEW

TALEXconverter LCAI 20 W 350mA–900mA ECO SR

ECO series

Product description

- Independent dimmable LED control gear
- Constant current LED control gear
- Output current adjustable between 350 – 900 mA
- Max. output power 20 W
- Nominal life of 50,000 h (at ta max. with a failure rate ≤ 0.2 % per 1,000 h)
- 5-year guarantee
- Dimming range 1 to 100 %

Properties

- Casing: polycarbonate, white
- Rapid installation of cable clamp and terminal cover, no tool required
- Large connection compartment
- Type of protection IP20

Interfaces

- DALI DEVICE Type 6
- DSI
- switchDIM (with memory function)
- corridorFUNCTION
- Input temperature sensor for LED control

Functions

- Adjustable output current (I-select resistor or DALI)
- Power-up fading at AC
- Intelligent Temperature Guard (overtemperature protection)
- Short-circuit protection
- Overload protection
- Constant Light Output function
- Suitable for emergency lighting units acc. to EN 50172

→ For product data sheet go to www.tridonic.com, or available on request

→

Product matrix, page 15

For standards see data sheet

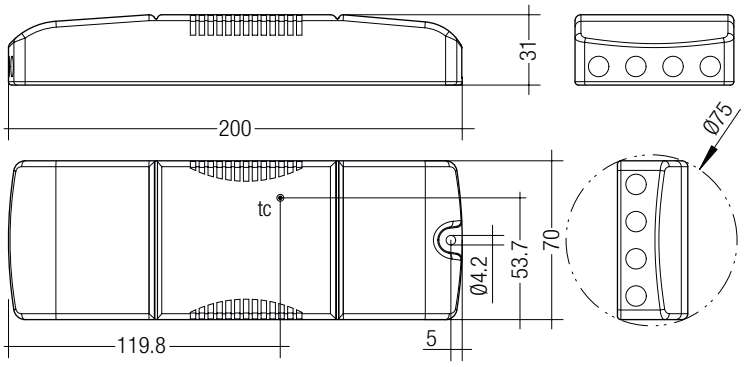

Technical data

Rated supply voltage	220 – 240 V
Input voltage, AC	198 – 264 V
Input voltage, DC	176 – 280 V
Mains frequency	0 / 50 / 60 Hz
Typ. current (at 230 V, 50 Hz, full load) ① ②	88 – 105 mA
Typ. current (220 V, 0 Hz, full load, 15 % dimming level) ②	22 – 26 mA
Leakage current (PE)	< 0.5 mA
Max. input power	25 W
Typ. efficiency (at 230 V 50 Hz, full load) ②	84 – 86 %
λ (at 230 V, 50 Hz, full load) ①	> 0.96
Typ. power input on standby ③	120 – 140 mW
THD (at 230 V, 50 Hz, full load)	< 20 %
Time to light (at 230 V, 50 Hz, full load, acc. to DALI)	< 0.6 s
Time to light (DC mode)	< 0.4 s
Switchover time (AC/DC)	< 0.4 s
Turn off time (at 230 V, 50 Hz, full load)	< 50 ms
Hold on time (at 230 V, 50 Hz, full load) ④	15 ms
Output current tolerance ①	± 3 %
Output current ripple	± 15 %
Max. output current peak	≤ output current + 18 %
PWM frequency ⑤	500 Hz
Dimming range	1 – 100 %
Max. output voltage	60 V
Dimensions L x W x H	200 x 70 x 31 mm

Ordering data

Type	Article number	Packaging, carton	Packaging, pallet	Weight per pc.
LCAI 20W 350mA-900mA ECO SR	28000123	10 pc(s).	400 pc(s).	0.2 kg

Specific technical data

Type	Output current	Min. forward voltage	Max. forward voltage ⑥	Max. output power ⑥	Typ. power consumption (at 230 V, 50 Hz, full load)	Typ. current consumption (at 230 V, 50 Hz, full load)	tc point max.	Ambient temperature ta	I-select resistor value
LCAI 20W 350mA-900mA ECO SR	350 mA	22 V	50.0 V	17.5 W	20.3 W	88 mA	80 °C	-25 ... 60 °C	open
LCAI 20W 350mA-900mA ECO SR	375 mA	22 V	50.0 V	18.8 W	21.9 W	95 mA	80 °C	-25 ... 60 °C	71.50 kΩ
LCAI 20W 350mA-900mA ECO SR	400 mA	22 V	50.0 V	20.0 W	23.1 W	100 mA	80 °C	-25 ... 60 °C	66.50 kΩ
LCAI 20W 350mA-900mA ECO SR	425 mA	21 V	47.5 V	20.0 W	23.1 W	100 mA	80 °C	-25 ... 60 °C	61.90 kΩ
LCAI 20W 350mA-900mA ECO SR	450 mA	20 V	45.0 V	20.0 W	23.0 W	100 mA	80 °C	-25 ... 60 °C	57.60 kΩ
LCAI 20W 350mA-900mA ECO SR	475 mA	18 V	42.5 V	20.0 W	22.9 W	100 mA	80 °C	-25 ... 60 °C	53.60 kΩ
LCAI 20W 350mA-900mA ECO SR	500 mA	18 V	40.5 V	20.0 W	23.5 W	102 mA	80 °C	-25 ... 60 °C	49.90 kΩ
LCAI 20W 350mA-900mA ECO SR	525 mA	17 V	38.5 V	20.0 W	23.5 W	102 mA	75 °C	-25 ... 55 °C	45.30 kΩ
LCAI 20W 350mA-900mA ECO SR	550 mA	16 V	36.5 V	20.0 W	23.5 W	102 mA	75 °C	-25 ... 55 °C	42.20 kΩ
LCAI 20W 350mA-900mA ECO SR	575 mA	15 V	35.0 V	20.0 W	23.5 W	102 mA	75 °C	-25 ... 55 °C	38.30 kΩ
LCAI 20W 350mA-900mA ECO SR	600 mA	15 V	33.5 V	20.0 W	23.5 W	102 mA	75 °C	-25 ... 55 °C	35.70 kΩ
LCAI 20W 350mA-900mA ECO SR	625 mA	14 V	32.5 V	20.0 W	23.5 W	102 mA	75 °C	-25 ... 55 °C	32.40 kΩ
LCAI 20W 350mA-900mA ECO SR	650 mA	13 V	31.0 V	20.0 W	23.5 W	102 mA	75 °C	-25 ... 55 °C	28.70 kΩ
LCAI 20W 350mA-900mA ECO SR	675 mA	13 V	30.0 V	20.0 W	23.5 W	102 mA	75 °C	-25 ... 55 °C	26.10 kΩ
LCAI 20W 350mA-900mA ECO SR	700 mA	12 V	29.0 V	20.0 W	23.7 W	103 mA	75 °C	-25 ... 55 °C	22.00 kΩ
LCAI 20W 350mA-900mA ECO SR	725 mA	12 V	28.0 V	20.0 W	23.7 W	103 mA	75 °C	-25 ... 55 °C	17.40 kΩ
LCAI 20W 350mA-900mA ECO SR	750 mA	12 V	27.0 V	20.0 W	23.7 W	103 mA	75 °C	-25 ... 55 °C	15.00 kΩ
LCAI 20W 350mA-900mA ECO SR	775 mA	11 V	26.0 V	20.0 W	23.7 W	103 mA	75 °C	-25 ... 55 °C	12.40 kΩ
LCAI 20W 350mA-900mA ECO SR	800 mA	11 V	25.5 V	20.0 W	23.8 W	103 mA	75 °C	-25 ... 55 °C	10.00 kΩ
LCAI 20W 350mA-900mA ECO SR	825 mA	10 V	24.5 V	20.0 W	23.8 W	103 mA	75 °C	-25 ... 55 °C	7.68 kΩ
LCAI 20W 350mA-900mA ECO SR	850 mA	10 V	24.0 V	20.0 W	24.0 W	104 mA	75 °C	-25 ... 55 °C	5.36 kΩ
LCAI 20W 350mA-900mA ECO SR	875 mA	10 V	23.5 V	20.0 W	24.0 W	104 mA	75 °C	-25 ... 55 °C	3.16 kΩ
LCAI 20W 350mA-900mA ECO SR	900 mA	10 V	22.5 V	20.0 W	24.1 W	105 mA	75 °C	-25 ... 55 °C	short circuit (0 Ω)

① Valid at 100 % dimming level.
② Depending on the selected output current.
③ Depending on the DALI traffic at the interface.
④ At power failure.
⑤ ± 20 %.
⑥ At full load.

ACCES-SORIES

I-SELECT PLUG

Product description

- Ready-for-use resistor to set output current value
- Resistor is base isolated
- Resistor power 0.25 W
- Resistor value tolerance ± 1 %

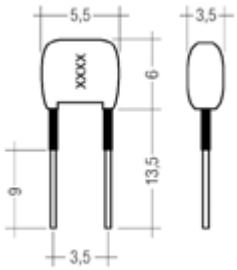

Ordering data

Type	Article number	Colour	Marking	Resistor value	Packaging, bag	Weight per pc.
I-SELECT PLUG MAX GR	28000274	Grey	MAX	0.0 kΩ	10 pc(s).	0.001 kg
I-SELECT PLUG 500mA GN	28000277	Green	0500	49.9 kΩ	10 pc(s).	0.001 kg
I-SELECT PLUG 700mA GN	28000278	Green	0700	22.0 kΩ	10 pc(s).	0.001 kg

IP20 SELV RoHS

NEW

TALEXconverter LCAI 35 W 350mA–900mA ECO SR

ECO series

Product description

- Independent dimmable LED control gear
- Constant current LED control gear
- Output current adjustable between 350 – 900 mA
- Max. output power 35 W
- Nominal life of 50,000 h (at ta max. with a failure rate ≤ 0.2 % per 1,000 h)
- 5-year guarantee
- Dimming range 1 to 100 %

Properties

- Casing: polycarbonate, white
- Rapid installation of cable clamp and terminal cover, no tool required
- Large connection compartment
- Type of protection IP20

Interfaces

- DALI DEVICE Type 6
- DSI
- switchDIM (with memory function)
- corridorFUNCTION
- Input temperature sensor for LED control

Functions

- Adjustable output current (I-select resistor or DALI)
- Power-up fading at AC
- Intelligent Temperature Guard (overtemperature protection)
- Short-circuit protection
- Overload protection
- Constant Light Output function
- Suitable for emergency lighting units acc. to EN 50172

→ For product data sheet go to www.tridonic.com, or available on request

→

Product matrix, page 15

For standards see data sheet

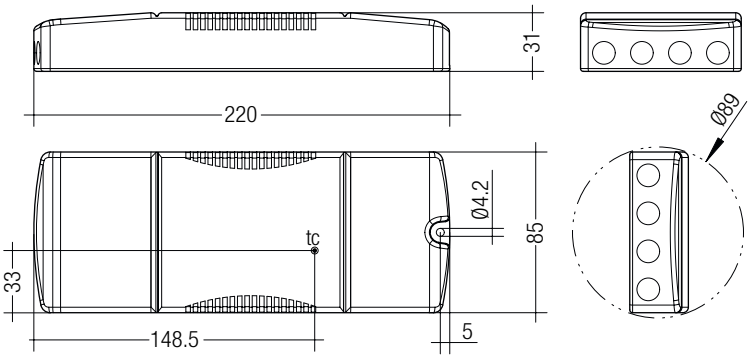

Technical data

Rated supply voltage	220 – 240 V
Input voltage, AC	198 – 264 V
Input voltage, DC	176 – 280 V
Mains frequency	0 / 50 / 60 Hz
Typ. current (at 230 V, 50 Hz, full load) ① ②	130 – 185 mA
Typ. current (220 V, 0 Hz, full load, 15 % dimming level) ②	32 – 36 mA
Leakage current (PE)	< 0.35 mA
Max. input power	41 W
Typ. efficiency (at 230 V 50 Hz, full load) ②	87 – 90 %
λ (at 230 V, 50 Hz, full load) ①	≥ 0.98
Typ. power input on standby ③	70 – 100 mW
THD (at 230 V, 50 Hz, full load)	< 5 %
Time to light (at 230 V, 50 Hz, full load, acc. to DALI)	< 0.2 s
Time to light (DC mode)	< 0.2 s
Switchover time (AC/DC)	< 0.2 s
Turn off time (at 230 V, 50 Hz, full load)	< 20 ms
Hold on time (at 230 V, 50 Hz, full load) ④	< 14 ms
Output current tolerance ①	± 3 %
Output current ripple	± 15 %
Max. output current peak	≤ output current + 18 %
PWM frequency ⑤	500 Hz
Dimming range	1 – 100 %
Max. output voltage	120 V
Dimensions L x W x H	220 x 85 x 31 mm

Ordering data

Type	Article number	Packaging, carton	Packaging, pallet	Weight per pc.
LCAI 35W 350mA-900mA ECO SR	**28000125**	10 pc(s).	400 pc(s).	0.263 kg

Specific technical data

Type	Output current	Min. forward voltage	Max. forward voltage ⑥	Max. output power ⑥	Typ. power consumption (at 230 V, 50 Hz, full load)	Typ. current consumption (at 230 V, 50 Hz, full load)	tc point max.	Ambient temperature ta	I-select resistor value
LCAI 35W 350mA-900mA ECO SR	350 mA	40 V	90.0 V	31.5 W	35.0 W	152 mA	70 °C	-25 ... 60 °C	open
LCAI 35W 350mA-900mA ECO SR	375 mA	40 V	90.0 V	33.8 W	37.6 W	163 mA	70 °C	-25 ... 60 °C	71.50 kΩ
LCAI 35W 350mA-900mA ECO SR	400 mA	39 V	88.0 V	35.0 W	37.9 W	165 mA	70 °C	-25 ... 60 °C	66.50 kΩ
LCAI 35W 350mA-900mA ECO SR	425 mA	37 V	82.5 V	35.0 W	38.2 W	167 mA	70 °C	-25 ... 60 °C	61.90 kΩ
LCAI 35W 350mA-900mA ECO SR	450 mA	35 V	78.0 V	35.0 W	38.6 W	169 mA	70 °C	-25 ... 60 °C	57.60 kΩ
LCAI 35W 350mA-900mA ECO SR	475 mA	33 V	74.0 V	35.0 W	38.9 W	170 mA	70 °C	-25 ... 60 °C	53.60 kΩ
LCAI 35W 350mA-900mA ECO SR	500 mA	31 V	70.5 V	35.0 W	39.2 W	172 mA	70 °C	-25 ... 60 °C	49.90 kΩ
LCAI 35W 350mA-900mA ECO SR	525 mA	30 V	67.0 V	35.0 W	39.3 W	173 mA	70 °C	-25 ... 60 °C	45.30 kΩ
LCAI 35W 350mA-900mA ECO SR	550 mA	28 V	64.0 V	35.0 W	39.4 W	173 mA	70 °C	-25 ... 60 °C	42.20 kΩ
LCAI 35W 350mA-900mA ECO SR	575 mA	27 V	61.0 V	35.0 W	39.4 W	174 mA	70 °C	-25 ... 60 °C	38.30 kΩ
LCAI 35W 350mA-900mA ECO SR	600 mA	26 V	58.5 V	35.0 W	39.5 W	175 mA	75 °C	-25 ... 60 °C	35.70 kΩ
LCAI 35W 350mA-900mA ECO SR	625 mA	25 V	56.5 V	35.0 W	39.6 W	175 mA	75 °C	-25 ... 60 °C	32.40 kΩ
LCAI 35W 350mA-900mA ECO SR	650 mA	24 V	54.0 V	35.0 W	39.7 W	176 mA	75 °C	-25 ... 60 °C	28.70 kΩ
LCAI 35W 350mA-900mA ECO SR	675 mA	23 V	52.0 V	35.0 W	39.7 W	176 mA	75 °C	-25 ... 60 °C	26.10 kΩ
LCAI 35W 350mA-900mA ECO SR	700 mA	22 V	50.5 V	35.0 W	39.8 W	177 mA	75 °C	-25 ... 60 °C	22.00 kΩ
LCAI 35W 350mA-900mA ECO SR	725 mA	21 V	48.5 V	35.0 W	39.9 W	178 mA	75 °C	-25 ... 60 °C	17.40 kΩ
LCAI 35W 350mA-900mA ECO SR	750 mA	21 V	47.0 V	35.0 W	40.0 W	179 mA	75 °C	-25 ... 60 °C	15.00 kΩ
LCAI 35W 350mA-900mA ECO SR	775 mA	20 V	45.5 V	35.0 W	40.1 W	180 mA	75 °C	-25 ... 60 °C	12.40 kΩ
LCAI 35W 350mA-900mA ECO SR	800 mA	19 V	44.0 V	35.0 W	40.3 W	181 mA	75 °C	-25 ... 60 °C	10.00 kΩ
LCAI 35W 350mA-900mA ECO SR	825 mA	19 V	42.5 V	35.0 W	40.4 W	182 mA	75 °C	-25 ... 60 °C	7.68 kΩ
LCAI 35W 350mA-900mA ECO SR	850 mA	18 V	41.5 V	35.0 W	40.5 W	183 mA	75 °C	-25 ... 60 °C	5.36 kΩ
LCAI 35W 350mA-900mA ECO SR	875 mA	17 V	40.5 V	35.0 W	40.6 W	184 mA	75 °C	-25 ... 60 °C	3.16 kΩ
LCAI 35W 350mA-900mA ECO SR	900 mA	17 V	39.0 V	35.0 W	40.7 W	185 mA	75 °C	-25 ... 60 °C	short circuit (0 Ω)

① Valid at 100 % dimming level.
② Depending on the selected output current.
③ Depending on the DALI traffic at the interface.
④ At power failure.
⑤ ± 20 %.
⑥ At full load.

ACCES-SORIES

I-SELECT PLUG

Product description

- Ready-for-use resistor to set output current value
- Resistor is base isolated
- Resistor power 0.25 W
- Resistor value tolerance ± 1 %

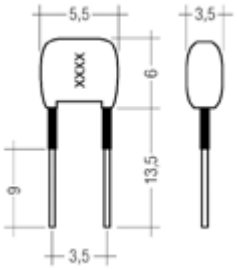

Ordering data

Type	Article number	Colour	Marking	Resistor value	Packaging, bag	Weight per pc.
I-SELECT PLUG MAX GR	**28000274**	Grey	MAX	0.0 kΩ	10 pc(s).	0.001 kg
I-SELECT PLUG 500mA GN	**28000277**	Green	0500	49.9 kΩ	10 pc(s).	0.001 kg
I-SELECT PLUG 700mA GN	**28000278**	Green	0700	22.0 kΩ	10 pc(s).	0.001 kg

ACCES-SORIES

LCF 12V FAN DRIVER

Product description

- Fan driver module with 12.4 V output voltage
- Drives the fan permanently (independent of the optional temperature sensor)
- Connection: stranded wires 0.2 mm², stripped wire endings twisted and tin-plated
- Max. output power of the LED control gear will be reduced by the power consumption of the fan and LCF 12V FAN DRIVER

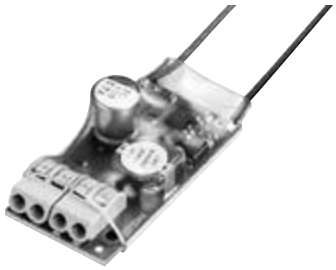

Technical data

Input voltage, DC	25 – 120 V
Output voltage DC	12.4 V
Max. output current (input voltage 25 – 49 V)	50 mA
Max. output current (input voltage 50 – 120 V)	70 mA
Max. power consumption incl. fan (at 30 mA)	0.55 W
Max. power consumption incl. fan (at 50 mA)	0.90 W
Max. power consumption incl. fan (at 70 mA)	1.25 W
Ambient temperature ta (at lifetime 50,000 h)	-25 ... +65 °C
Dimensions L x W x H	45 x 23 x 14 mm

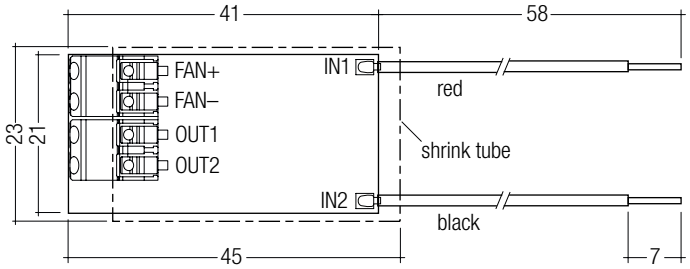

Ordering data

Type	Article number	Packaging carton	Packaging pallet	Weight per pc.
LCF 12V FAN DRIVER	**86459562**	50 pc(s).	1,200 pc(s).	0.01 kg

IP20 **SELV** RoHS

NEW

TALEXconverter LCAI 35 W 900mA–1750mA ECO SR

ECO series

Product description

- Independent dimmable LED control gear
- Constant current LED control gear
- Output current adjustable between 900 – 1,750 mA
- Max. output power 35 W
- Nominal life of 50,000 h (at ta max. with a failure rate ≤ 0.2 % per 1,000 h)
- 5-year guarantee
- Dimming range 1 to 100 %

Properties

- Casing: polycarbonate, white
- Rapid installation of cable clamp and terminal cover, no tool required
- Large connection compartment
- Type of protection IP20

Interfaces

- DALI DEVICE Type 6
- DSI
- switchDIM (with memory function)
- corridorFUNCTION
- Input temperature sensor for LED control

Functions

- Adjustable output current (I-select resistor or DALI)
- Power-up fading at AC
- Intelligent Temperature Guard (overtemperature protection)
- Short-circuit protection
- Overload protection
- Constant Light Output function
- Suitable for emergency lighting units acc. to EN 50172

→ For product data sheet go to www.tridonic.com, or available on request

→

Product matrix, page 15

For standards see data sheet

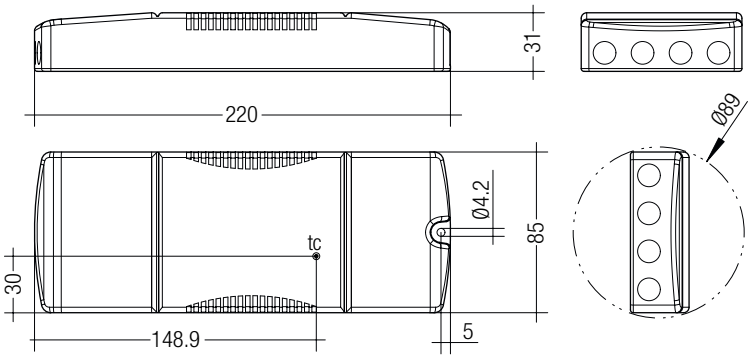

Technical data

Rated supply voltage	220 – 240 V
Input voltage, AC	198 – 264 V
Input voltage, DC	176 – 280 V
Mains frequency	0 / 50 / 60 Hz
Typ. current (at 230 V, 50 Hz, full load) ① ②	173 – 184 mA
Typ. current (220 V, 0 Hz, full load, 15 % dimming level) ②	32 – 37 mA
Leakage current (PE)	< 0.3 mA
Max. input power	42 W
Typ. efficiency (at 230 V 50 Hz, full load) ②	85 – 88 %
λ (at 230 V, 50 Hz, full load) ①	≥ 0.98
Typ. power input on standby ③	70 – 100 mW
THD (at 230 V, 50 Hz, full load)	< 5 %
Time to light (at 230 V, 50 Hz, full load, acc. to DALI)	< 0.2 s
Time to light (DC mode)	< 0.2 s
Switchover time (AC/DC)	< 0.2 s
Turn off time (at 230 V, 50 Hz, full load)	< 20 ms
Hold on time (at 230 V, 50 Hz, full load) ④	< 14 ms
Output current tolerance ①	± 3 %
Output current ripple	± 15 %
Max. output current peak	≤ output current + 18 %
PWM frequency ⑤	500 Hz
Dimming range	1 – 100 %
Max. output voltage	60 V
Dimensions L x W x H	220 x 85 x 31 mm

Ordering data

Type	Article number	Packaging, carton	Packaging, pallet	Weight per pc.
LCAI 35W 900mA-1750mA ECO SR	**28000127**	10 pc(s).	400 pc(s).	0.272 kg

Specific technical data

Type	Output current	Min. forward voltage	Max. forward voltage ⑥	Max. output power ⑥	Typ. power consumption (at 230 V, 50 Hz, full load)	Typ. current consumption (at 230 V, 50 Hz, full load)	tc point max.	Ambient temperature ta	I-select resistor value
LCAI 35W 900mA-1750mA ECO SR	900 mA	17 V	39.0 V	35 W	39.9 W	173 mA	70 °C	-25 ... 60 °C	open
LCAI 35W 900mA-1750mA ECO SR	950 mA	16 V	37.0 V	35 W	40.0 W	174 mA	70 °C	-25 ... 60 °C	69.80 kΩ
LCAI 35W 900mA-1750mA ECO SR	1,000 mA	15 V	35.0 V	35 W	40.1 W	174 mA	70 °C	-25 ... 60 °C	64.90 kΩ
LCAI 35W 900mA-1750mA ECO SR	1,050 mA	14 V	33.5 V	35 W	40.2 W	175 mA	70 °C	-25 ... 60 °C	56.00 kΩ
LCAI 35W 900mA-1750mA ECO SR	1,100 mA	14 V	32.0 V	35 W	40.3 W	175 mA	70 °C	-25 ... 60 °C	47.50 kΩ
LCAI 35W 900mA-1750mA ECO SR	1,150 mA	13 V	30.5 V	35 W	40.3 W	175 mA	70 °C	-25 ... 60 °C	43.20 kΩ
LCAI 35W 900mA-1750mA ECO SR	1,200 mA	12 V	29.5 V	35 W	40.4 W	175 mA	70 °C	-25 ... 60 °C	40.20 kΩ
LCAI 35W 900mA-1750mA ECO SR	1,250 mA	12 V	28.0 V	35 W	40.4 W	176 mA	70 °C	-25 ... 60 °C	36.50 kΩ
LCAI 35W 900mA-1750mA ECO SR	1,300 mA	12 V	27.0 V	35 W	40.5 W	176 mA	70 °C	-25 ... 60 °C	32.40 kΩ
LCAI 35W 900mA-1750mA ECO SR	1,350 mA	11 V	26.0 V	35 W	40.5 W	176 mA	70 °C	-25 ... 60 °C	28.70 kΩ
LCAI 35W 900mA-1750mA ECO SR	1,400 mA	11 V	25.0 V	35 W	40.6 W	176 mA	75 °C	-25 ... 60 °C	22.00 kΩ
LCAI 35W 900mA-1750mA ECO SR	1,450 mA	10 V	24.5 V	35 W	40.6 W	177 mA	75 °C	-25 ... 60 °C	17.80 kΩ
LCAI 35W 900mA-1750mA ECO SR	1,500 mA	10 V	23.5 V	35 W	40.7 W	177 mA	75 °C	-25 ... 60 °C	15.00 kΩ
LCAI 35W 900mA-1750mA ECO SR	1,550 mA	10 V	23.0 V	35 W	40.8 W	177 mA	75 °C	-25 ... 60 °C	12.10 kΩ
LCAI 35W 900mA-1750mA ECO SR	1,600 mA	9 V	22.0 V	35 W	40.9 W	178 mA	75 °C	-25 ... 60 °C	9.31 kΩ
LCAI 35W 900mA-1750mA ECO SR	1,650 mA	9 V	21.5 V	35 W	41.0 W	178 mA	75 °C	-25 ... 60 °C	6.49 kΩ
LCAI 35W 900mA-1750mA ECO SR	1,700 mA	9 V	21.0 V	35 W	41.1 W	179 mA	80 °C	-25 ... 60 °C	3.83 kΩ
LCAI 35W 900mA-1750mA ECO SR	1,750 mA	9 V	20.0 V	35 W	41.2 W	179 mA	80 °C	-25 ... 60 °C	short circuit (0 Ω)

① Valid at 100 % dimming level.
② Depending on the selected output current.
③ Depending on the DALI traffic at the interface.
④ At power failure.
⑤ ± 20 %.
⑥ At full load.

ACCES-SORIES

I-SELECT PLUG

Product description

- Ready-for-use resistor to set output current value
- Resistor is base isolated
- Resistor power 0.25 W
- Resistor value tolerance ± 1 %

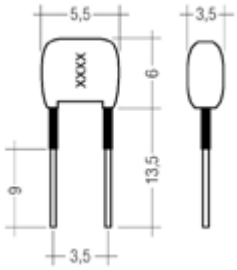

Ordering data

Type	Article number	Colour	Marking	Resistor value	Packaging, bag	Weight per pc.
I-SELECT PLUG MAX GR	**28000274**	Grey	MAX	0.0 kΩ	10 pc(s).	0.001 kg
I-SELECT PLUG 1050mA BR	**28000279**	Brown	1050	56.0 kΩ	10 pc(s).	0.001 kg
I-SELECT PLUG 1400mA BR	**28000280**	Brown	1400	22.0 kΩ	10 pc(s).	0.001 kg

ACCES-SORIES

LCF 12V FAN DRIVER

Product description

- Fan driver module with 12.4 V output voltage
- Drives the fan permanently (independent of the optional temperature sensor)
- Connection: stranded wires 0.2 mm², stripped wire endings twisted and tin-plated
- Max. output power of the LED control gear will be reduced by the power consumption of the fan and LCF 12V FAN DRIVER

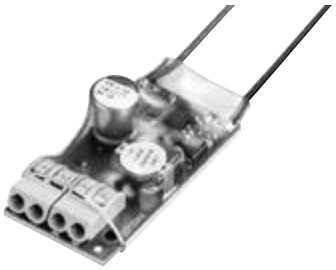

Technical data

Input voltage, DC	25 – 120 V
Output voltage DC	12.4 V
Max. output current (input voltage 25 – 49 V)	50 mA
Max. output current (input voltage 50 – 120 V)	70 mA
Max. power consumption incl. fan (at 30 mA)	0.55 W
Max. power consumption incl. fan (at 50 mA)	0.90 W
Max. power consumption incl. fan (at 70 mA)	1.25 W
Ambient temperature ta (at lifetime 50,000 h)	-25 ... +65 °C
Dimensions L x W x H	45 x 23 x 14 mm

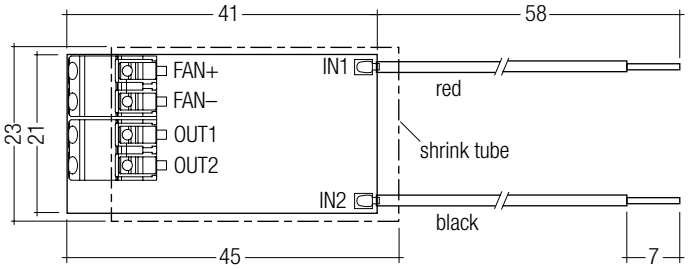

Ordering data

Type	Article number	Packaging carton	Packaging pallet	Weight per pc.
LCF 12V FAN DRIVER	**86459562**	50 pc(s).	1,200 pc(s).	0.01 kg

IP20 SELV RoHS

NEW

TALEXconverter LCAI 55 W 900mA–1750mA ECO SR

ECO series

Product description

- Independent dimmable LED control gear
- Constant current LED control gear
- Output current adjustable between 900 – 1,750 mA
- Max. output power 55 W
- Nominal life of 50,000 h (at ta max. with a failure rate ≤ 0.2 % per 1,000 h)
- 5-year guarantee
- Dimming range 1 to 100 %

Properties

- Casing: polycarbonate, white
- Rapid installation of cable clamp and terminal cover, no tool required
- Large connection compartment
- Type of protection IP20

Interfaces

- DALI DEVICE Type 6
- DSI
- switchDIM (with memory function)
- corridorFUNCTION
- Input temperature sensor for LED control

Functions

- Adjustable output current (I-select resistor or DALI)
- Power-up fading at AC
- Intelligent Temperature Guard (overtemperature protection)
- Short-circuit protection
- Overload protection
- Constant Light Output function
- Suitable for emergency lighting units acc. to EN 50172

→ For product data sheet go to www.tridonic.com, or available on request

→

Product matrix, page 15

For standards see data sheet

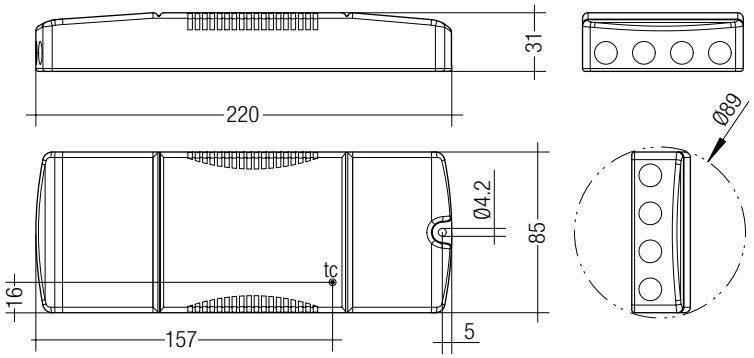

Technical data

Rated supply voltage	220 – 240 V
Input voltage, AC	198 – 264 V
Input voltage, DC	176 – 280 V
Mains frequency	0 / 50 / 60 Hz
Typ. current (at 230 V, 50 Hz, full load) ① ②	210 – 290 mA
Typ. current (220 V, 0 Hz, full load, 15 % dimming level) ②	38 – 51 mA
Leakage current (PE)	< 0.3 mA
Max. input power	64 W
Typ. efficiency (at 230 V 50 Hz, full load) ②	88 – 90 %
λ (at 230 V, 50 Hz, full load) ①	≥ 0.98
Typ. power input on standby ③	70 – 100 mW
THD (at 230 V, 50 Hz, full load)	< 5 %
Time to light (at 230 V, 50 Hz, full load, acc. to DALI)	< 0.2 s
Time to light (DC mode)	< 0.2 s
Switchover time (AC/DC)	< 0.2 s
Turn off time (at 230 V, 50 Hz, full load)	< 20 ms
Hold on time (at 230 V, 50 Hz, full load) ④	< 14 ms
Output current tolerance ①	± 3 %
Output current ripple	± 15 %
Max. output current peak	≤ output current + 18 %
PWM frequency ⑤	500 Hz
Dimming range	1 – 100 %
Max. output voltage	60 V
Dimensions L x W x H	220 x 85 x 31 mm

Ordering data

Type	Article number	Packaging, carton	Packaging, pallet	Weight per pc.
LCAI 55W 900mA-1750mA ECO SR	**28000129**	10 pc(s).	400 pc(s).	0.278 kg

Specific technical data

Type	Output current	Min. forward voltage	Max. forward voltage ⑥	Max. output power ⑥	Typ. power consumption (at 230 V, 50 Hz, full load)	Typ. current consumption (at 230 V, 50 Hz, full load)	tc point max.	Ambient temperature ta	I-select resistor value
LCAI 55W 900mA-1750mA ECO SR	900 mA	21 V	48.0 V	43.2 W	48.5 W	211 mA	75 °C	-25 ... 60 °C	open
LCAI 55W 900mA-1750mA ECO SR	950 mA	21 V	48.0 V	45.6 W	51.2 W	223 mA	75 °C	-25 ... 55 °C	69.80 kΩ
LCAI 55W 900mA-1750mA ECO SR	1,000 mA	21 V	48.0 V	48.0 W	53.9 W	234 mA	75 °C	-25 ... 55 °C	64.90 kΩ
LCAI 55W 900mA-1750mA ECO SR	1,050 mA	21 V	48.0 V	50.4 W	56.6 W	246 mA	75 °C	-25 ... 55 °C	56.00 kΩ
LCAI 55W 900mA-1750mA ECO SR	1,100 mA	21 V	48.0 V	52.8 W	59.3 W	258 mA	75 °C	-25 ... 50 °C	47.50 kΩ
LCAI 55W 900mA-1750mA ECO SR	1,150 mA	21 V	48.0 V	55.0 W	62.0 W	270 mA	75 °C	-25 ... 50 °C	43.20 kΩ
LCAI 55W 900mA-1750mA ECO SR	1,200 mA	20 V	46.0 V	55.0 W	62.0 W	270 mA	75 °C	-25 ... 50 °C	40.20 kΩ
LCAI 55W 900mA-1750mA ECO SR	1,250 mA	20 V	44.0 V	55.0 W	61.8 W	269 mA	75 °C	-25 ... 50 °C	36.50 kΩ
LCAI 55W 900mA-1750mA ECO SR	1,300 mA	19 V	42.5 V	55.0 W	62.1 W	270 mA	75 °C	-25 ... 50 °C	32.40 kΩ
LCAI 55W 900mA-1750mA ECO SR	1,350 mA	18 V	41.0 V	55.0 W	62.2 W	270 mA	75 °C	-25 ... 50 °C	28.70 kΩ
LCAI 55W 900mA-1750mA ECO SR	1,400 mA	18 V	39.5 V	55.0 W	62.1 W	270 mA	75 °C	-25 ... 50 °C	22.00 kΩ
LCAI 55W 900mA-1750mA ECO SR	1,450 mA	17 V	38.0 V	55.0 W	61.9 W	269 mA	75 °C	-25 ... 50 °C	17.80 kΩ
LCAI 55W 900mA-1750mA ECO SR	1,500 mA	16 V	37.0 V	55.0 W	62.4 W	271 mA	75 °C	-25 ... 50 °C	15.00 kΩ
LCAI 55W 900mA-1750mA ECO SR	1,550 mA	16 V	35.5 V	55.0 W	61.8 W	269 mA	75 °C	-25 ... 50 °C	12.10 kΩ
LCAI 55W 900mA-1750mA ECO SR	1,600 mA	15 V	34.5 V	55.0 W	62.0 W	270 mA	75 °C	-25 ... 50 °C	9.31 kΩ
LCAI 55W 900mA-1750mA ECO SR	1,650 mA	15 V	33.5 V	55.0 W	62.1 W	270 mA	75 °C	-25 ... 50 °C	6.49 kΩ
LCAI 55W 900mA-1750mA ECO SR	1,700 mA	14 V	32.5 V	55.0 W	62.1 W	270 mA	75 °C	-25 ... 50 °C	3.83 kΩ
LCAI 55W 900mA-1750mA ECO SR	1,750 mA	14 V	31.5 V	55.0 W	61.9 W	269 mA	75 °C	-25 ... 50 °C	short circuit (0 Ω)

① Valid at 100 % dimming level.
② Depending on the selected output current.
③ Depending on the DALI traffic at the interface.
④ At power failure.
⑤ ± 20 %.
⑥ At full load.

ACCES-SORIES

I-SELECT PLUG

Product description

- Ready-for-use resistor to set output current value
- Resistor is base isolated
- Resistor power 0.25 W
- Resistor value tolerance ± 1 %

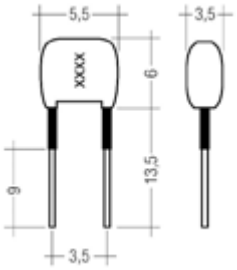

Ordering data

Type	Article number	Colour	Marking	Resistor value	Packaging, bag	Weight per pc.
I-SELECT PLUG MAX GR	**28000274**	Grey	MAX	0.0 kΩ	10 pc(s).	0.001 kg
I-SELECT PLUG 1050mA BR	**28000279**	Brown	1050	56.0 kΩ	10 pc(s).	0.001 kg
I-SELECT PLUG 1400mA BR	**28000280**	Brown	1400	22.0 kΩ	10 pc(s).	0.001 kg

ACCES-SORIES

LCF 12V FAN DRIVER

Product description

- Fan driver module with 12.4 V output voltage
- Drives the fan permanently (independent of the optional temperature sensor)
- Connection: stranded wires 0.2 mm², stripped wire endings twisted and tin-plated
- Max. output power of the LED control gear will be reduced by the power consumption of the fan and LCF 12V FAN DRIVER

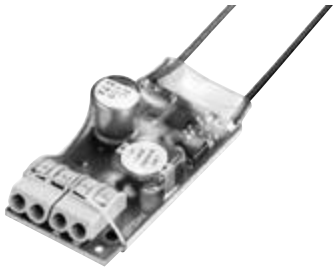

Technical data

Input voltage, DC	25 – 120 V
Output voltage DC	12.4 V
Max. output current (input voltage 25 – 49 V)	50 mA
Max. output current (input voltage 50 – 120 V)	70 mA
Max. power consumption incl. fan (at 30 mA)	0.55 W
Max. power consumption incl. fan (at 50 mA)	0.90 W
Max. power consumption incl. fan (at 70 mA)	1.25 W
Ambient temperature ta (at lifetime 50,000 h)	-25 ... +65 °C
Dimensions L x W x H	45 x 23 x 14 mm

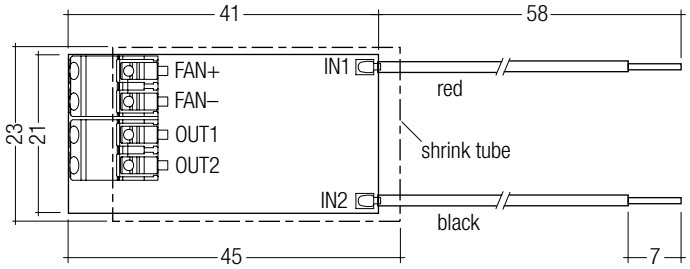

Ordering data

Type	Article number	Packaging carton	Packaging pallet	Weight per pc.
LCF 12V FAN DRIVER	**86459562**	50 pc(s).	1,200 pc(s).	0.01 kg

IP20 SELV RoHS

TALEXconverter LCBI 15 W 350/500/700 mA BASIC phase-cut lp

BASIC series

Product description

- Dimmable via phase-cut dimmers (leading & trailing edge)
- Nominal life of 50,000 h (at max ta 50 °C with a failure rate ≤ 0.2 % per 1,000 h)
- 350, 500 or 700 mA output current
- Push-in terminals
- Connecting cable, cable cross-section 0.5 – 1.5 mm²
- Output power 15 / 16 W
- SELV
- Type of protection IP20
- Output dimmed analogue (current amplitude)
- Dimming range typ. 5 to 100 % (depending on dimmer)

Properties

- Casing: polycarbonate, white
- Compact dimensions
- Overload protection
- Short-circuit protection
- No-load protection

→ For product data sheet go to www.tridonic.com, or available on request

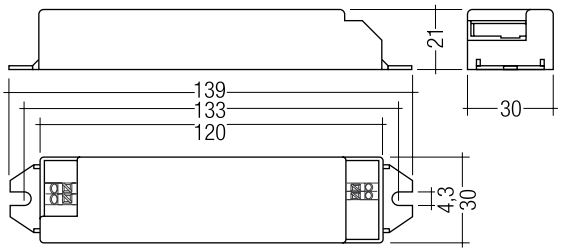

Technical data

Rated supply voltage	220 – 240 V
Input voltage, AC	198 – 264 V
Mains frequency	50 / 60 Hz
Output current tolerance	± 5 %
Typical ripple current at full load	± 30 %
Power factor at full load ①	0.99
Power factor at min. load ①	0.97C
Turn on time (at 230 V, 50 Hz, full load)	≤ 0.1 s
Turn off time (at 230 V, 50 Hz, full load)	≤ 0.1 s
Hold on time at power failure (output)	0 s
Ambient temperature ta	-25 ... +50 °C
Ambient temperature ta (at lifetime 50,000 h)	50 °C
Max. casing temperature tc	85 °C
Storage temperature ts	-40 ... +85 °C
Storage temperature	–
Dimensions L x W x H	139 x 30 x 21 mm

Ordering data

Type	Article number	Packaging, carton	Packaging, pallet	Weight per pc.
LCBI 15W 350mA BASIC lp	**89800255**	25 pc(s).	600 pc(s).	0.053 kg
LCBI 15W 500mA BASIC lp	**89800256**	25 pc(s).	600 pc(s).	0.053 kg
LCBI 15W 700mA BASIC lp	**89800257**	25 pc(s).	600 pc(s).	0.053 kg

→

For standards see data sheet

Specific technical data

Type	Typ. rated current with fan (at 230 V, 50 Hz, full load)	Efficiency at full load ①	Efficiency at min. load ①	Output current	Output voltage range ①	Max. output voltage ②	Max. input power	Max. output power
LCBI 15W 350mA BASIC lp	0.10 A	78 %	76 %	350 mA	21.0 – 46.0 V	51 V	21 W	16 W
LCBI 15W 500mA BASIC lp	0.09 A	77 %	75 %	500 mA	13.5 – 30.0 V	34 V	20 W	15 W
LCBI 15W 700mA BASIC lp	0.09 A	76 %	74 %	700 mA	10.0 – 21.5 V	24 V	20 W	15 W

① Test result at 230 V, 50 Hz.
② At failure mode.

IP20 SELV RoHS

NEW

TALEXconverter LCBI 15 W 350/500/700 mA BASIC phase-cut SR

BASIC series

Product description

- Dimmable via phase-cut dimmers (leading & trailing edge)
- Nominal life time up to 50,000 h (at ta 50 °C with a failure rate max. 0.2 % per 1,000 h)
- 350, 500 or 700 mA output current
- Push-in terminals
- Connecting cable, cable cross-section 0.5 – 1.5 mm²
- Output power 14 / 15 W
- SELV
- Type of protection IP20
- Output dimmed analogue (current amplitude)
- Dimming range typ. 5 to 100 % (depending on dimmer)

Properties

- Casing: polycarbonate, white
- Compact dimensions
- Overload protection
- Short-circuit protection
- No-load protection

→ For product data sheet go to www.tridonic.com, or available on request

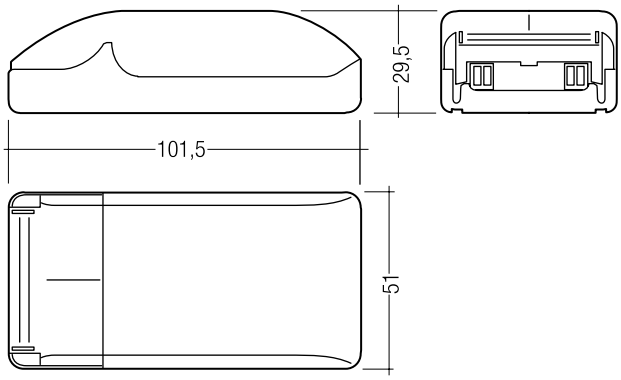

Technical data

Rated supply voltage	220 – 240 V
Input voltage, AC	198 – 264 V
Mains frequency	50 / 60 Hz
Output current tolerance	± 7.5 %
Typical ripple current at full load	± 30 %
Power factor at full load ①	0.99
Power factor at min. load ①	0.97C
Turn on time (at 230 V, 50 Hz, full load)	≤ 0.1 s
Turn off time (at 230 V, 50 Hz, full load)	≤ 0.1 s
Hold on time at power failure (output)	0 s
Ambient temperature ta	-25 ... +50 °C
Ambient temperature ta (at lifetime 50,000 h)	50 °C
Max. casing temperature tc	75 °C
Storage temperature ts	-40 ... +85 °C
Dimensions L x W x H	102 x 51 x 30 mm

Ordering data

Type	Article number	Packaging, carton	Packaging, pallet
LCBI 15W 350mA BASIC PHASE-CUT SR	**89800266**	20 pc(s).	1,000 pc(s).
LCBI 15W 500mA BASIC PHASE-CUT SR	**89800267**	20 pc(s).	1,000 pc(s).
LCBI 15W 700mA BASIC PHASE-CUT SR	**89800268**	20 pc(s).	1,000 pc(s).

→

For standards see data sheet

Specific technical data

Type	Typ. rated current (at 230 V, 50 Hz, full load)	Efficiency at full load ①	Efficiency at min. load ①	Output current	Output voltage range ①	Max. output voltage ②	Max. input power	Max. output power
LCBI 15W 350mA BASIC PHASE-CUT SR	0.09 A	78 %	76 %	350 mA	21.0 – 42 V	51 V	19 W	15 W
LCBI 15W 500mA BASIC PHASE-CUT SR	0.09 A	77 %	75 %	500 mA	13.5 – 30 V	34 V	20 W	15 W
LCBI 15W 700mA BASIC PHASE-CUT SR	0.09 A	76 %	74 %	700 mA	10.0 – 20 V	24 V	19 W	14 W

① Test result at 230 V, 50 Hz.
② At failure mode.

IP20 SELV RoHS

NEW

TALEXconverter LCBU 10W 12V BASIC phase-cut SR

BASIC series

Product description

- Dimmable via leading edge and trailing edge phase dimmers
- Nominal life of 50,000 h (at max ta 50 °C with a failure rate ≤ 0.2 % per 1,000 h)
- 12 V output voltage
- Screw terminal
- Connecting cable, wire cross-section 0.5 – 2.5 mm²
- Output power 10 W
- SELV
- Type of protection IP20
- Dimming range typ. 5 to 100 % (depending on dimmer)

Properties

- Casing: polycarbonate, white
- Compact dimensions
- Overload protection
- Short-circuit protection
- No-load protection

→ For product data sheet go to www.tridonic.com, or available on request

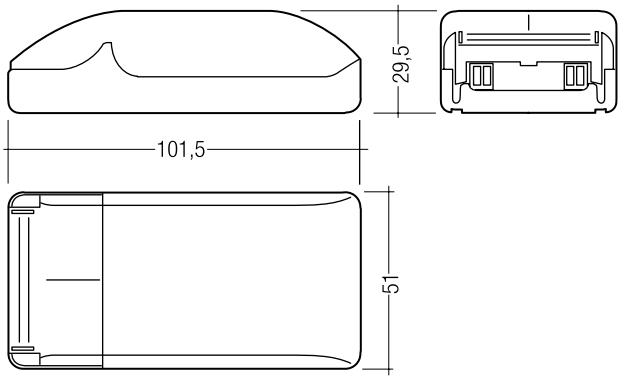

Technical data

Rated supply voltage	220 – 240 V
Input voltage, AC	198 – 264 V
Mains frequency	50 / 60 Hz
Typical ripple current at full load	± 30 %
Power factor at full load ①	0.9
Power factor at min. load ①	0.7
Turn on time (at 230 V, 50 Hz, full load)	≤ 0.1 s
Turn off time (at 230 V, 50 Hz, full load)	≤ 0.1 s
Hold on time at power failure (output)	0 s
Ambient temperature ta	-25 ... +50 °C
Ambient temperature ta (at lifetime 50,000 h)	50 °C
Max. casing temperature tc	75 °C
Storage temperature ts	-40 ... +85 °C
Dimensions L x W x H	102 x 51 x 30 mm

Ordering data

Type	Article number	Packaging, carton	Packaging, pallet	Weight per pc.
LCBU 10W 12V BASIC phase-cut SR	**89800289**	20 pc(s).	1,000 pc(s).	0.065 kg

→

For standards see data sheet

Specific technical data

Type	Typ. rated current (at 230 V, 50 Hz, full load)	Efficiency at full load ①	Efficiency at min. load ①	Output current	Output voltage range	Max. output voltage	Max. input power	Max. output power
LCU SPEEDY LED MR16 3-10W 12V	0.06 A	77 %	65 %	0.83 A	11 – 15 V	15 V	13 W	10 W

① Test result at 230 V, 50 Hz.

IP20 SELV RoHS

NEW

TALEXconverter LCBU 25W 12V BASIC phase-cut SR

BASIC series

Product description

- Dimmable via phase-cut dimmers (leading & trailing edge)
- Nominal life of 50,000 h (at max ta 50 °C with a failure rate ≤ 0.2 % per 1,000 h)
- 12 V output voltage
- Screw terminal
- Connecting cable, cable cross-section 0.5 – 1.5 mm²
- Output power 25 W
- SELV
- Type of protection IP20
- Output dimmed analogue (current amplitude)
- Dimming range typ. 5 to 100 % (depending on dimmer)

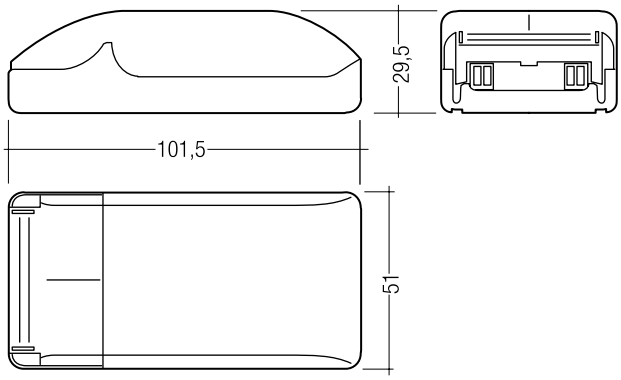

Properties

- Casing: polycarbonate, white
- Compact dimensions
- Overload protection
- Short-circuit protection
- No-load protection

→ For product data sheet go to www.tridonic.com, or available on request

Technical data

Rated supply voltage	220 – 240 V
Input voltage, AC	198 – 264 V
Mains frequency	50 / 60 Hz
Typical ripple current at full load	± 30 %
Power factor at full load ①	0.99
Power factor at min. load ①	0.75
Turn on time (at 230 V, 50 Hz, full load)	≤ 0.1 s
Turn off time (at 230 V, 50 Hz, full load)	≤ 0.1 s
Hold on time at power failure (output)	0 s
Ambient temperature ta	-25 ... +50 °C
Ambient temperature ta (at lifetime 50,000 h)	50 °C
Max. casing temperature tc	–
Storage temperature ts	-40 ... +85 °C
Dimensions L x W x H	–

Ordering data

Type	Article number	Packaging, carton	Packaging, pallet
LCBU 25W 12V BASIC phase-cut SR	**89800290**	1 pc(s).	1 pc(s).

→

For standards see data sheet

Specific technical data

Type	Typ. rated current (at 230 V, 50 Hz, full load)	Efficiency at full load ①	Efficiency at min. load ①	Output current	Output voltage range	Max. output voltage	Max. input power	Max. output power
LCBU 25W 12V BASIC phase-cut SR	0.15 A	79 %	–	2.1 A	11 – 15 V	15 V	32 W	25 W

① Test result at 230 V, 50 Hz.

IP20 SELV RoHS

NEW

TALEXconverter LCI 15 W 350/500/700 mA stepDIM lp

BASIC series

Product description

- Constant current LED control gear for luminaire installation
- Nominal life of 50,000 h (at ta max. with a failure rate ≤ 0.2 % per 1,000 h)
- 350, 500 or 700 mA output current
- Push-in terminals
- Connecting cable, cable cross-section 0.5 – 1.5 mm²
- Output power 15 / 16 / 16.5 W
- SELV
- Type of protection IP20
- Output dimmed analogue (current amplitude)

Properties

- Casing: polycarbonate, white
- Compact dimensions
- Overload protection
- Short-circuit protection
- No-load protection

→ For product data sheet go to www.tridonic.com, or available on request

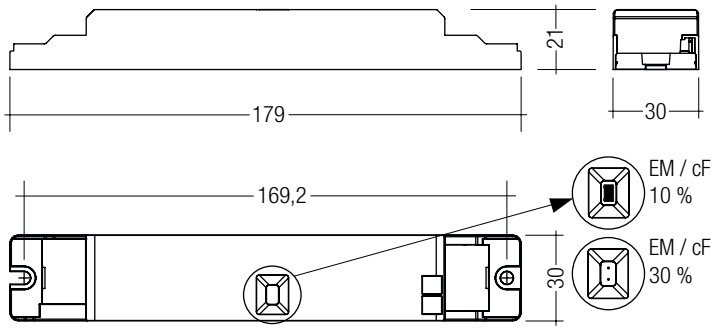

Technical data

Rated supply voltage	220 – 240 V
Input voltage, AC	198 – 264 V
Input voltage, DC	198 – 264 V
Mains frequency	0 / 50 / 60 Hz
Output current tolerance (normal operation 100 %)	± 7.5 %
Typical ripple current at full load	± 15 %
Power factor at full load ①	0.99
Power factor at min. load ①	0.97C
Turn on time (at 230 V, 50 Hz, full load)	≤ 0.1 s
Turn off time (at 230 V, 50 Hz, full load)	≤ 0.1 s
Hold on time at power failure (output)	0 s
Storage temperature ts	-40 ... +85 °C
Dimensions L x W x H	179 x 30 x 21 mm

Ordering data

Type	Article number	Packaging, carton	Packaging, pallet
LCI 15W 350mA stepDIM lp	**89800277**	1 pc(s).	1 pc(s).
LCI 15W 500mA stepDIM lp	**89800278**	1 pc(s).	1 pc(s).
LCI 15W 700mA stepDIM lp	**89800279**	1 pc(s).	1 pc(s).

→

For standards see data sheet

Specific technical data

Type	Typ. output current	Output current tolerance	Min. forward voltage	Max. forward voltage	Typ. output power	Typ. power consumption	Typ. power consumption	tc point max.	Ambient temperature ta
Normal operation 100 % (LCI 15W 350mA)									
LCI 15W 350mA stepDIM lp	350 mA	± 7.5 %	21.0 V	46.0 V	16.0 W	20.0 W	89 mA	90 °C	-25 ... +50 °C
Operation cF / EM 30 % (LCI 15W 350mA)									
LCI 15W 350mA stepDIM lp	105 mA	± 25 %	21.0 V	46.0 V	4.8 W	6.2 W	60 mA	90 °C	-25 ... +50 °C
Operation cF / EM 10 % (LCI 15W 350mA)									
LCI 15W 350mA stepDIM lp	35 mA	± 25 %	21.0 V	46.0 V	1.6 W	2.7 W	19 mA	90 °C	-25 ... +50 °C
Normal operation 100 % (LCI 15W 500mA)									
LCI 15W 500mA stepDIM lp	500 mA	± 7.5 %	13.5 V	33.5 V	16.5 W	20.5 W	86 mA	85 °C	-25 ... +55 °C
Operation cF / EM 30 % (LCI 15W 500mA)									
LCI 15W 500mA stepDIM lp	150 mA	± 25 %	13.5 V	33.5 V	4.9 W	6.3 W	57 mA	85 °C	-25 ... +55 °C
Operation cF / EM 30 % (LCI 15W 500mA)									
LCI 15W 500mA stepDIM lp	50 mA	± 25 %	13.5 V	33.5 V	1.7 W	3.0 W	20 mA	85 °C	-25 ... +55 °C
Normal operation 100 % (LCI 15W 700mA)									
LCI 15W 700mA stepDIM lp	700 mA	± 7.5 %	10.0 V	21.5 V	15.0 W	19.0 W	84 mA	85 °C	-25 ... +55 °C
Operation cF / EM 30 % (LCI 15W 700mA)									
LCI 15W 700mA stepDIM lp	210 mA	± 25 %	10.0 V	21.5 V	4.5 W	5.8 W	51 mA	85 °C	-25 ... +55 °C
Operation cF / EM 10 % (LCI 15W 700mA)									
LCI 15W 700mA stepDIM lp	70 mA	± 25 %	10.0 V	21.5 V	1.5 W	3.0 W	21 mA	85 °C	-25 ... +55 °C

① Test result at 230 V, 50 Hz.

IP20 RoHS

TALEXconverter LCI 40 W 300 mA I010

TOP series

Product description

- Built-in control gear for LED
- Constant current LED control gear with 300 mA output current
- Output power 40 W
- Nominal life of 50,000 h (at max ta 50 °C with a failure rate ≤ 0.2 % per 1,000 h)
- 5-year guarantee

Properties

- Low profile metal casing with white cover
- Type of protection IP20

Functions

- Overload protection
- Short-circuit proof
- Suitable for emergency lighting units acc. to EN 50172

→ For product data sheet go to www.tridonic.com, or available on request

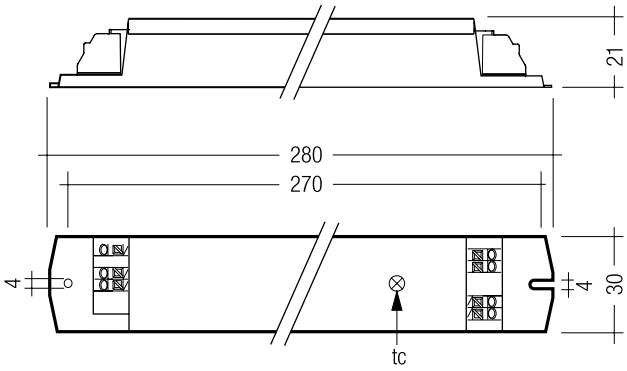

Technical data

Rated supply voltage	220 – 240 V
AC voltage range	198 – 264 V
DC voltage range	176 – 280 V
Mains frequency	0 / 50 / 60 Hz
Typ. rated current (at 230 V, 50 Hz, full load)	0.19 A
Mains current (at 220 V, 0 Hz, full load)	0.2 A
Leakage current (PE)	< 0.2 mA
Max. input power	45 W
Typ. efficiency (at 230 V, 50 Hz, full load)	> 92.5 %
Typ. λ (at 230 V, 50 Hz, full load)	0.95
Time to light	0.4 s
Turn off time (at 230 V, 50 Hz, full load)	0.1 s
Hold on time ①	10 ms
Ambient temperature ta	-25 ... +50 °C
Max. casing temperature tc	65 °C
Dimensions L x W x H	280 x 30 x 21 mm
Hole spacing D	270 mm

Ordering data

Type	Article number	Packaging, carton	Packaging, pallet	Weight per pc.
LCI 040/0300 I010 220-240 V	**28000161**	10 pc(s).	960 pc(s).	0.199 kg

Product matrix, page 15

For standards see data sheet

Specific technical data

Type	Output current	Output current tolerance	Output voltage range	Max. output voltage ②	Typ. output power
LCI 040/0300 I010 220-240 V	300 mA	± 5 %	50 – 135 V	250 V	40 W

① At power failure.
② In non-load operation.

IP20 RoHS

TALEXconverter LCI 50 W 350 mA I010

TOP series

Product description

- Built-in control gear for LED
- Constant current LED control gear with 350 mA output current
- Output power 50 W
- Nominal life of 50,000 h (at max ta 50 °C with a failure rate ≤ 0.2 % per 1,000 h)
- 5-year guarantee

Properties

- Low profile metal casing with white cover
- Type of protection IP20

Functions

- Overload protection
- Short-circuit proof
- Suitable for emergency lighting units acc. to EN 50172

→ For product data sheet go to www.tridonic.com, or available on request

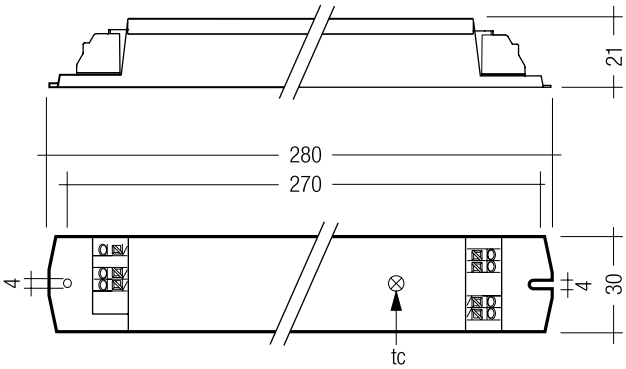

Technical data

Rated supply voltage	220 – 240 V
AC voltage range	198 – 264 V
DC voltage range	176 – 280 V
Mains frequency	0 / 50 / 60 Hz
Typ. rated current (at 230 V, 50 Hz, full load)	0.24 A
Mains current (at 220 V, 0 Hz, full load)	0.24 A
Leakage current (PE)	< 0.2 mA
Max. input power	56 W
Typ. efficiency (at 230 V, 50 Hz, full load)	> 93 %
Typ. λ (at 230 V, 50 Hz, full load)	0.95
Time to light	0.4 s
Turn off time (at 230 V, 50 Hz, full load)	0.1 s
Hold on time ①	10 ms
Ambient temperature ta	-25 ... +50 °C
Max. casing temperature tc	70 °C
Dimensions L x W x H	280 x 30 x 21 mm
Hole spacing D	270 mm

Ordering data

Type	Article number	Packaging, carton	Packaging, pallet	Weight per pc.
LCI 050/0350 I010 220-240 V	**28000159**	10 pc(s).	960 pc(s).	0.199 kg

→

Product matrix, page 15

For standards see data sheet

Specific technical data

Type	Output current	Output current tolerance	Output voltage range	Max. output voltage ②	Typ. output power
LCI 050/0350 I010 220-240 V	350 mA	± 5 %	50 – 140 V	250 V	50 W

① At power failure.
② In non-load operation.

IP20 RoHS

TALEXconverter LCI 70 W 300 mA I010

TOP series

Product description

- Built-in control gear for LED
- Constant current LED control gear with 300 mA output current
- Output power 70 W
- Nominal life time up to 50,000 h (at ta 50 °C with a failure rate max. 0.2 % per 1,000 h)
- 5-year guarantee

Properties

- Low profile metal casing with white cover
- Type of protection IP20

Functions

- Overload protection
- Short-circuit proof
- Suitable for emergency lighting units acc. to EN 50172

→ For product data sheet go to www.tridonic.com, or available on request

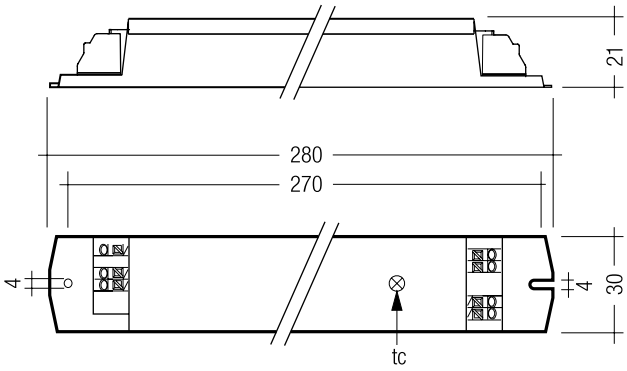

Technical data

Rated supply voltage	220 – 240 V
AC voltage range	198 – 264 V
DC voltage range	176 – 280 V
Mains frequency	0 / 50 / 60 Hz
Typ. rated current (at 230 V, 50 Hz, full load)	0.33 A
Mains current (at 220 V, 0 Hz, full load)	0.33 A
Leakage current (PE)	< 0.2 mA
Max. input power	78 W
Typ. efficiency (at 230 V, 50 Hz, full load)	> 94.5 %
Typ. λ (at 230 V, 50 Hz, full load)	0.95
Time to light	0.4 s
Turn off time (at 230 V, 50 Hz, full load)	0.1 s
Hold on time ①	10 ms
Ambient temperature ta	-25 ... +50 °C
Max. casing temperature tc	70 °C
Dimensions L x W x H	280 x 30 x 21 mm
Hole spacing D	270 mm

Ordering data

Type	Article number	Packaging, carton	Packaging, pallet	Weight per pc.
LCI 070/0300 I010 220-240 V	**28000160**	10 pc(s).	960 pc(s).	0.197 kg

Product matrix, page 15

For standards see data sheet

Specific technical data

Type	Output current	Output current tolerance	Output voltage range	Max. output voltage ②	Typ. output power
LCI 070/0300 I010 220-240 V	300 mA	± 5 %	116 – 230 V	250 V	70 W

① At power failure.
② In non-load operation.

IP20 RoHS

TALEXconverter LCI 80 W 350 mA I010

TOP series

Product description

- Built-in control gear for LED
- Constant current LED control gear with 350 mA output current
- Output power 80 W
- Nominal life of 50,000 h (at max ta 50 °C with a failure rate ≤ 0.2 % per 1,000 h)
- 5-year guarantee

Properties

- Low profile metal casing with white cover
- Type of protection IP20

Functions

- Overload protection
- Short-circuit proof
- Suitable for emergency lighting units acc. to EN 50172

→ For product data sheet go to www.tridonic.com, or available on request

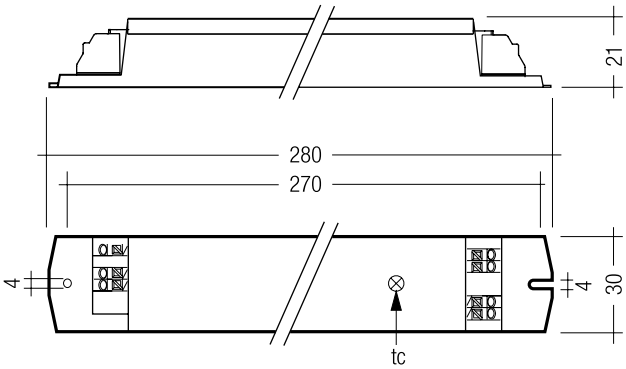

Technical data

Rated supply voltage	220 – 240 V
AC voltage range	198 – 264 V
DC voltage range	176 – 280 V
Mains frequency	0 / 50 / 60 Hz
Typ. rated current (at 230 V, 50 Hz, full load)	0.38 A
Mains current (at 220 V, 0 Hz, full load)	0.39 A
Leakage current (PE)	< 0.2 mA
Max. input power	89 W
Typ. efficiency (at 230 V, 50 Hz, full load)	> 94.5 %
Typ. λ (at 230 V, 50 Hz, full load)	0.95
Time to light	0.4 s
Turn off time (at 230 V, 50 Hz, full load)	0.1 s
Hold on time ①	10 ms
Ambient temperature ta	-25 ... +50 °C
Max. casing temperature tc	70 °C
Dimensions L x W x H	280 x 30 x 21 mm
Hole spacing D	270 mm

Ordering data

Type	Article number	Packaging, carton	Packaging, pallet	Weight per pc.
LCI 080/0350 I010 220-240V	**28000093**	10 pc(s).	960 pc(s).	0.196 kg

→

Product matrix, page 15

For standards see data sheet

Specific technical data

Type	Output current	Output current tolerance	Output voltage range	Max. output voltage ②	Typ. output power
LCI 080/0350 I010 220-240V	350 mA	± 5 %	116 – 230 V	250 V	80 W

① At power failure.
② In non-load operation.

IP20 SELV RoHS

NEW

TALEXconverter LCI 4x16 W 200mA–400mA lp

TOP series

Product description

- Built-in control gear for LED
- Constant current LED control gear with 200 – 400 mA output current
- 1- to 4-channel operation
- Max. output power 67.2 W
- SELV
- Nominal life time up to 50,000 h (at ta 50 °C with a failure rate max. 0.2 % per 1,000 h)
- 5-year guarantee

Properties

- Low profile metal casing with white cover
- Type of protection IP20

Functions

- Overload protection
- Short-circuit proof
- Suitable for emergency lighting units acc. to EN 50172

→ For product data sheet go to www.tridonic.com, or available on request

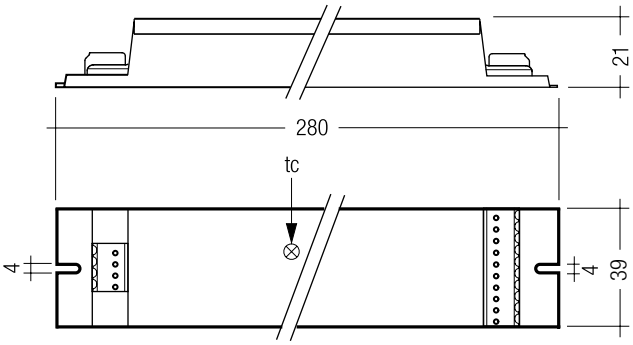

Technical data

Rated supply voltage	220 – 240 V
AC voltage range	198 – 264 V
DC voltage range	176 – 280 V
Mains frequency	0 / 50 / 60 Hz
Typ. rated current (at 230 V, 50 Hz, full load)	0.35 A
Mains current (at 220 V, 0 Hz, full load)	0.35 A
Max. input power	75.8 W
Typ. efficiency (at 230 V, 50 Hz, full load)	> 85 %
Typ. λ (at 230 V, 50 Hz, full load)	0.95
Time to light	0.5 s
Ambient temperature ta	-25 ... +50 °C
Max. casing temperature tc	85 °C
Dimensions L x W x H	280 x 39 x 21 mm
Hole spacing D	270 mm

Ordering data

Type	Article number	Packaging, carton	Packaging, pallet	Weight per pc.
LCI 4x16W 200mA-400mA lp	**28000245**	10 pc(s).	540 pc(s).	0.24 kg

→

Product matrix, page 15

For standards see data sheet

Specific technical data

Type	Output current range	Output current tolerance	Output voltage range		Max. output voltage ①	Typ. output power range
			I = 350 mA	I > 350 mA		
LCI 4x16W 200mA-400mA lp	200 – 400 mA	± 7.5 %	22 – 48 V	22 – 42 V	53 V	17.6 – 67.2 W

① In non-load operation.

IP20 SELV RoHS

NEW

TALEXconverter LCI 10 W 350 mA TEC lp

TEC series

Product description

- Nominal life time up to 30,000 h (at ta 50 °C with a failure rate max. 0.3 % per 1,000 h)
- 350 mA output current
- Push-in terminals
- Output power 10 W
- SELV
- Isolated
- Type of protection IP20

Properties

- Casing: polycarbonate, white
- Low profile plastic casing with slim dimension
- Overtemperature protection
- Overload protection
- Short-circuit protection
- No-load protection

→ For product data sheet go to www.tridonic.com, or available on request

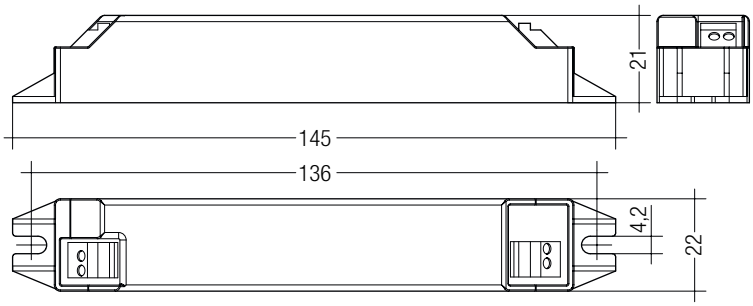

Technical data

Rated supply voltage	220 – 240 V
Input voltage, AC	198 – 264 V
Typ. rated current (at 230 V, 50 Hz, full load)	0.07 A
Mains frequency	50 / 60 Hz
Max. input power	12.5 W
Output power	10 W
Output current tolerance	± 7.5 %
Typical ripple current at full load	± 20 %
Turn on time (at 230 V, 50 Hz, full load)	≤ 0.7 s
Turn off time (at 230 V, 50 Hz, full load)	≤ 0.7 s
Hold on time at power failure	0 s
Ambient temperature ta	-20 ... +50 °C
Ambient temperature ta (at lifetime 50,000 h)	40 °C
Max. casing temperature tc	80 °C
Storage temperature ts	-40 ... +85 °C
Dimensions L x W x H	145 x 22 x 21 mm

Ordering data

Type	Article number	Packaging, carton	Packaging, low volume	Packaging, high volume	Weight per pc.
LCI 10W 350mA TEC lp	**87500219**	25 pc(s).	1,150 pc(s).	8,050 pc(s).	0.047 kg

→

Product matrix, page 15

For standards see data sheet

Specific technical data

Type	Power factor at full load ①	Efficiency at full load ①	Power factor at min. load ①	Efficiency at min. load ①	Output current	Output voltage range ①	Max. output voltage ②
LCI 10W 350mA TEC lp	0.75C	83 %	0.7C	79 %	350 mA	13 – 29 V	33 V

① Test result at 230 V, 50 Hz.
② At failure mode.

IP20 **SELV** RoHS

NEW

TALEXconverter LCI 20 W 350/500/700 mA TEC lp

TEC series

Product description

- Nominal life time up to 30,000 h (at ta 50 °C with a failure rate max. 0.3 % per 1,000 h)
- 350, 500 or 700 mA output current
- Push terminal for rapid automatic or manual wiring
- Output power 20 W
- SELV
- Isolated
- Type of protection IP20

Properties

- Low profile metal casing with white cover
- Overtemperature protection
- Overload protection
- Short-circuit protection
- No-load protection

→ For product data sheet go to www.tridonic.com, or available on request

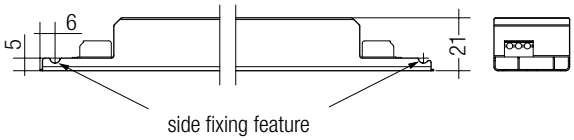

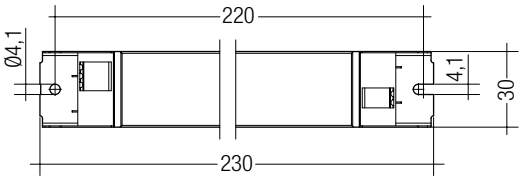

Technical data

Rated supply voltage	220 – 240 V
Input voltage, AC	198 – 264 V
Typ. rated current (at 230 V, 50 Hz, full load)	0.1 A
Mains frequency	50 / 60 Hz
Max. input power	24 W
Output power	20 W
THD (at 230 V, 50 Hz, full load)	< 20 %
Output current tolerance	± 7.5 %
Turn on time (at 230 V, 50 Hz, full load)	≤ 0.7 s
Turn off time (at 230 V, 50 Hz, full load)	≤ 0.7 s
Hold on time at power failure	0 s
Ambient temperature ta	-20 ... +50 °C
Ambient temperature ta (at lifetime 50,000 h)	40 °C
Max. casing temperature tc	65 °C
Storage temperature ts	-40 ... +85 °C
Dimensions L x W x H	230 x 30 x 21 mm

Ordering data

Type	Article number	Packaging, carton	Packaging, low volume	Packaging, high volume	Weight per pc.
LCI 20W 350mA TEC lp	**87500220**	50 pc(s).	1,050 pc(s).	3,150 pc(s).	0.146 kg
LCI 20W 500mA TEC lp	**87500221**	50 pc(s).	1,050 pc(s).	3,150 pc(s).	0.144 kg
LCI 20W 700mA TEC lp	**87500222**	50 pc(s).	1,050 pc(s).	3,150 pc(s).	0.140 kg

→

Product matrix, page 15

For standards see data sheet

Specific technical data

Type	Power factor at full load ①	Efficiency at full load ①	Power factor at min. load ①	Efficiency at min. load ①	Output current	Output voltage range ①	Max. output voltage ②	Typical ripple current at full load
LCI 20W 350mA TEC lp	0.97	88 %	0.89C	84 %	350 mA	26 – 57 V	66 V	± 25 %
LCI 20W 500mA TEC lp	0.97	88 %	0.87C	83 %	500 mA	18 – 40 V	48 V	± 25 %
LCI 20W 700mA TEC lp	0.97	86 %	0.86C	81 %	700 mA	13 – 29 V	35 V	± 30 %

① Test result at 230 V, 50 Hz.
② At failure mode.

IP20 SELV RoHS

NEW

TALEXconverter LCI 35 W 350/500/700/1050 mA TEC lp

TEC series

Product description

- Nominal life time up to 30,000 h (at ta 50 °C with a failure rate max. 0.3 % per 1,000 h)
- 350, 500, 700 or 1,050 mA output current
- Push terminal for rapid automatic or manual wiring
- Output power 35 W
- SELV
- Isolated
- Type of protection IP20

Properties

- Low profile metal casing with white cover
- Overtemperature protection
- Overload protection
- Short-circuit protection
- No-load protection

→ For product data sheet go to www.tridonic.com, or available on request

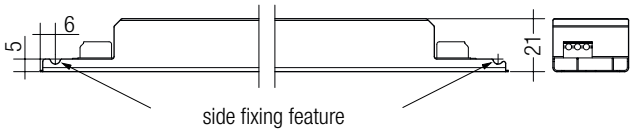

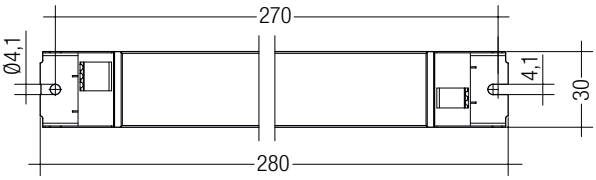

Technical data

Rated supply voltage	220 – 240 V
Input voltage, AC	198 – 264 V
Typ. rated current (at 230 V, 50 Hz, full load)	0.17 A
Mains frequency	50 / 60 Hz
Max. input power	41.5 W
Output power	35 W
THD (at 230 V, 50 Hz, full load)	< 20 %
Output current tolerance	± 7.5 %
Turn on time (at 230 V, 50 Hz, full load)	≤ 0.7 s
Turn off time (at 230 V, 50 Hz, full load)	≤ 0.7 s
Hold on time at power failure	0 s
Ambient temperature ta	-20 ... +50 °C
Ambient temperature ta (at lifetime 50,000 h)	40 °C
Max. casing temperature tc	70 °C
Storage temperature ts	-40 ... +85 °C
Dimensions L x W x H	280 x 30 x 21 mm

Ordering data

Type	Article number	Packaging, carton	Packaging, low volume	Packaging, high volume	Weight per pc.
LCI 35W 350mA TEC lp	**87500223**	50 pc(s).	900 pc(s).	2,700 pc(s).	0.182 kg
LCI 35W 500mA TEC lp	**87500224**	50 pc(s).	900 pc(s).	2,700 pc(s).	0.181 kg
LCI 35W 700mA TEC lp	**87500225**	50 pc(s).	900 pc(s).	2,700 pc(s).	0.182 kg
LCI 35W 1050mA TEC lp	**87500226**	50 pc(s).	900 pc(s).	2,700 pc(s).	0.180 kg

→

Product matrix, page 15

For standards see data sheet

Specific technical data

Type	Power factor at full load ①	Efficiency at full load ①	Power factor at min. load ①	Efficiency at min. load ①	Output current	Output voltage range ①	Max. output voltage ②	Typical ripple current at full load
LCI 35W 350mA TEC lp	0.98	90.0 %	0.91C	88.5 %	350 mA	50.0 – 100.0 V	115 V	± 20 %
LCI 35W 500mA TEC lp	0.98	90.0 %	0.91C	87.5 %	500 mA	35.0 – 70.0 V	85 V	± 25 %
LCI 35W 700mA TEC lp	0.98	88.5 %	0.92C	86.0 %	700 mA	25.0 – 50.0 V	63 V	± 25 %
LCI 35W 1050mA TEC lp	0.98	87.5 %	0.92C	84.5 %	1,050 mA	16.5 – 33.5 V	44 V	± 30 %

① Test result at 230 V, 50 Hz.
② At failure mode.

IP20 SELV RoHS

NEW

TALEXconverter LCI 60 W 700/1050 mA TEC lp

TEC series

Product description

- Nominal life time up to 30,000 h (at ta 50 °C with a failure rate max. 0.3 % per 1,000 h)
- 700 or 1,050 mA output current
- Push terminal for rapid automatic or manual wiring
- Output power 60 W
- SELV
- Isolated
- Type of protection IP20

Properties

- Low profile metal casing with white cover
- Overtemperature protection
- Overload protection
- Short-circuit protection
- No-load protection

→ For product data sheet go to www.tridonic.com, or available on request

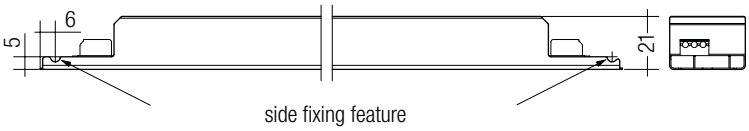

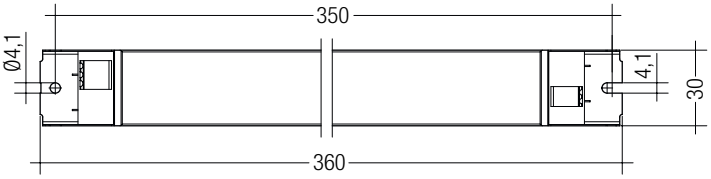

Technical data

Rated supply voltage	220 – 240 V
Input voltage, AC	198 – 264 V
Typ. rated current (at 230 V, 50 Hz, full load)	0.3 A
Mains frequency	50 / 60 Hz
Max. input power	70 W
Output power	60 W
THD (at 230 V, 50 Hz, full load)	< 20 %
Output current tolerance	± 7.5 %
Typical ripple current at full load	± 30 %
Turn on time (at 230 V, 50 Hz, full load)	≤ 0.7 s
Turn off time (at 230 V, 50 Hz, full load)	≤ 0.7 s
Hold on time at power failure	0 s
Ambient temperature ta	-20 ... +50 °C
Ambient temperature ta (at lifetime 50,000 h)	40 °C
Storage temperature ts	-40 ... +85 °C
Dimensions L x W x H	360 x 30 x 21 mm

Ordering data

Type	Article number	Packaging, carton	Packaging, low volume	Packaging, high volume	Weight per pc.
LCI 60W 700mA TEC lp	**87500227**	50 pc(s).	650 pc(s).	1,950 pc(s).	0.265 kg
LCI 60W 1050mA TEC lp	**87500228**	50 pc(s).	650 pc(s).	1,950 pc(s).	0.265 kg

→

Product matrix, page 15

For standards see data sheet

Specific technical data

Type	Power factor at full load ①	Efficiency at full load ①	Power factor at min. load ①	Efficiency at min. load ①	Output current	Output voltage range ①	Max. output voltage ②	Max. casing temperature tc
LCI 60W 700mA TEC lp	0.98	91.5 %	0.93C	90 %	700 mA	46.5 – 85.5 V	98 V	70 °C
LCI 60W 1050mA TEC lp	0.98	90.5 %	0.93C	89 %	1,050 mA	31.0 – 57.0 V	62 V	75 °C

① Test result at 230 V, 50 Hz.
② At failure mode.

IP20 SELV RoHS

NEW

TALEXconverter LCI 65 W 1400/1750 mA TEC lp

TEC series

Product description

- Nominal life time up to 30,000 h (at ta 50 °C with a failure rate max. 0.3 % per 1,000 h)
- 1,400 or 1,750 mA output current
- Push terminal for rapid automatic or manual wiring
- Output power 65 W
- SELV
- Isolated
- Type of protection IP20

Properties

- Low profile metal casing with white cover
- Overtemperature protection
- Overload protection
- Short-circuit protection
- No-load protection

→ For product data sheet go to www.tridonic.com, or available on request

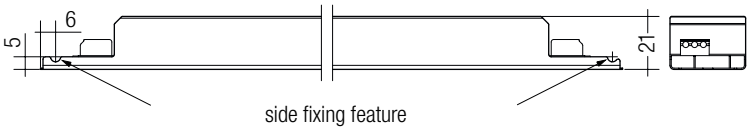

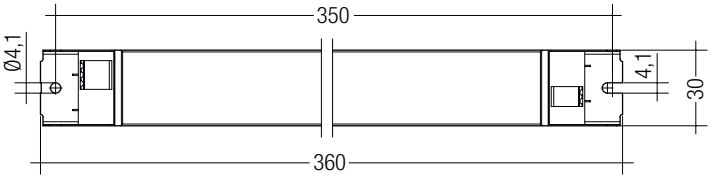

Technical data

Rated supply voltage	220 – 240 V
Input voltage, AC	198 – 264 V
Typ. rated current (at 230 V, 50 Hz, full load)	0.32 A
Mains frequency	50 / 60 Hz
Max. input power	75 W
Output power	65 W
THD (at 230 V, 50 Hz, full load)	< 20 %
Output current tolerance	± 7.5 %
Typical ripple current at full load	± 30 %
Turn on time (at 230 V, 50 Hz, full load)	≤ 0.7 s
Turn off time (at 230 V, 50 Hz, full load)	≤ 0.7 s
Hold on time at power failure	0 s
Ambient temperature ta	-20 ... +50 °C
Ambient temperature ta (at lifetime 50,000 h)	40 °C
Max. casing temperature tc	80 °C
Storage temperature ts	-40 ... +85 °C
Dimensions L x W x H	360 x 30 x 21 mm

Ordering data

Type	Article number	Packaging, carton	Packaging, low volume	Packaging, high volume	Weight per pc.
LCI 65W 1400mA TEC lp	**87500229**	50 pc(s).	650 pc(s).	1,950 pc(s).	0.265 kg
LCI 65W 1750mA TEC lp	**87500230**	50 pc(s).	650 pc(s).	1,950 pc(s).	0.265 kg

→

Product matrix, page 15

For standards see data sheet

Specific technical data

Type	Power factor at full load ①	Efficiency at full load ①	Power factor at min. load ①	Efficiency at min. load ①	Output current	Output voltage range ①	Max. output voltage ②
LCI 65W 1400mA TEC lp	0.98	90.0 %	0.93C	87 %	1,400 mA	23.0 – 46.5 V	55 V
LCI 65W 1750mA TEC lp	0.98	89.5 %	0.93C	86 %	1,750 mA	18.5 – 37.0 V	43 V

① Test result at 230 V, 50 Hz.
② At failure mode.

IP20 SELV RoHS

NEW

TALEXconverter LCAI 20 W 150mA–400mA ECO lp

ECO series

Product description

- Dimmable built-in control gear for LED
- Constant current LED control gear
- Output current adjustable between 150 – 400 mA
- Max. output power 20 W
- Nominal life of 50,000 h (at ta max. with a failure rate ≤ 0.2 % per 1,000 h)
- 5-year guarantee
- Dimming range 1 to 100 %

Properties

- Low profile metal casing with white cover
- Type of protection IP20

Interfaces

- DALI DEVICE Type 6
- DSI
- switchDIM (with memory function)
- corridorFUNCTION

Functions

- Adjustable output current (I-select resistor or DALI)
- Power-up fading at AC
- Intelligent Temperature Guard (overtemperature protection)
- Short-circuit protection
- Overload protection
- Constant Light Output function
- Suitable for emergency lighting units acc. to EN 50172

→ For product data sheet go to www.tridonic.com, or available on request

Product matrix, page 15

For standards see data sheet

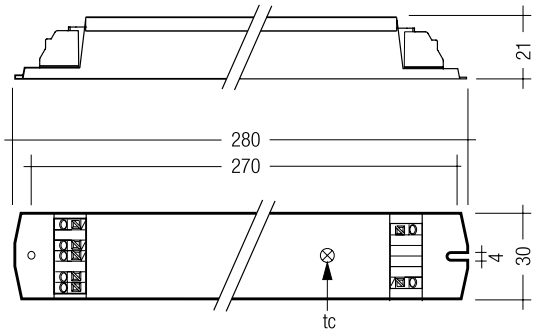

Technical data

Rated supply voltage	220 – 240 V
Input voltage, AC	198 – 264 V
Input voltage, DC	176 – 280 V
Mains frequency	0 / 50 / 60 Hz
Typ. current (at 230 V, 50 Hz, full load) ① ②	50 – 105 mA
Typ. current (220 V, 0 Hz, full load, 15 % dimming level) ②	18 – 19 mA
Leakage current (PE)	< 0.5 mA
Max. input power	25 W
Typ. efficiency (at 230 V 50 Hz, full load) ②	80 – 87 %
λ (at 230 V, 50 Hz, full load) ① ②	0.83 – 0.95
Typ. power input on standby ③	120 – 140 mW
THD (at 230 V, 50 Hz, full load)	< 22 %
Time to light (at 230 V, 50 Hz, full load, acc. to DALI)	< 0.6 s
Time to light (DC mode)	< 0.4 s
Switchover time (AC/DC)	< 0.4 s
Turn off time (at 230 V, 50 Hz, full load)	< 50 ms
Hold on time (at 230 V, 50 Hz, full load) ④	15 ms
Output current tolerance ①	± 3 %
Output current ripple	± 15 %
Max. output current peak	≤ output current + 20 %
PWM frequency ⑤	500 Hz
Dimming range	1 – 100 %
Max. output voltage	60 V
Dimensions L x W x H	280 x 30 x 21 mm

Ordering data

Type	Article number	Packaging, carton	Packaging, pallet
LCAI 20W 150mA-400mA ECO lp	**28000132**	1 pc(s).	1 pc(s).

Specific technical data

Type	Output current	Min. forward voltage	Max. forward voltage ⑥	Max. output power ⑥	Typ. power consumption (at 230 V, 50 Hz, full load)	Typ. current consumption (at 230 V, 50 Hz, full load)	tc point max.	Ambient temperature ta	I-select resistor value
LCAI 20W 150mA-400mA ECO Ip	150 mA	22 V	50 V	7.5 W	9.3 W	50 mA	80 °C	-25 ... 65 °C	open
LCAI 20W 150mA-400mA ECO Ip	175 mA	22 V	50 V	8.8 W	10.6 W	55 mA	80 °C	-25 ... 65 °C	63.40 kΩ
LCAI 20W 150mA-400mA ECO Ip	200 mA	22 V	50 V	10.0 W	11.9 W	61 mA	80 °C	-25 ... 65 °C	54.90 kΩ
LCAI 20W 150mA-400mA ECO Ip	225 mA	22 V	50 V	11.3 W	13.3 W	67 mA	80 °C	-25 ... 65 °C	47.50 kΩ
LCAI 20W 150mA-400mA ECO Ip	250 mA	22 V	50 V	12.5 W	14.6 W	71 mA	80 °C	-25 ... 65 °C	40.20 kΩ
LCAI 20W 150mA-400mA ECO Ip	275 mA	22 V	50 V	13.8 W	16.0 W	76 mA	80 °C	-25 ... 65 °C	34.00 kΩ
LCAI 20W 150mA-400mA ECO Ip	300 mA	22 V	50 V	15.0 W	17.4 W	82 mA	80 °C	-25 ... 65 °C	27.40 kΩ
LCAI 20W 150mA-400mA ECO Ip	325 mA	22 V	50 V	16.3 W	18.7 W	88 mA	80 °C	-25 ... 65 °C	22.00 kΩ
LCAI 20W 150mA-400mA ECO Ip	350 mA	22 V	50 V	17.5 W	20.1 W	93 mA	80 °C	-25 ... 65 °C	12.00 kΩ
LCAI 20W 150mA-400mA ECO Ip	375 mA	22 V	50 V	18.8 W	21.5 W	99 mA	80 °C	-25 ... 65 °C	6.19 kΩ
LCAI 20W 150mA-400mA ECO Ip	400 mA	22 V	50 V	20.0 W	22.9 W	105 mA	80 °C	-25 ... 65 °C	short circuit (0 Ω)

① Valid at 100 % dimming level.
② Depending on the selected output current.
③ Depending on the DALI traffic at the interface.
④ At power failure.
⑤ ± 20 %.
⑥ At full load.

IP20 RoHS

TALEXconverter LCAI 40 W 300 mA I010 one4all
ECO series

Product description
- Dimmable built-in control gear for LED
- Constant current LED control gear with 300 mA output current
- Output power 40 W
- Nominal life time up to 50,000 h (at ta 55 °C with a failure rate ≤ 0.2 % per 1,000 h)
- 5-year guarantee

Properties
- Low profile metal casing with white cover
- Type of protection IP20

Interfaces
- DALI DEVICE Type 6
- DSI
- switchDIM (with memory function)
- corridorFUNCTION

Functions
- Overload protection
- Overtemperature protection
- Short-circuit proof
- Dimming in DC adjustable
- Suitable for emergency lighting units acc. to EN 50172

→ For product data sheet go to www.tridonic.com, or available on request

Product matrix, page 15

For standards see data sheet

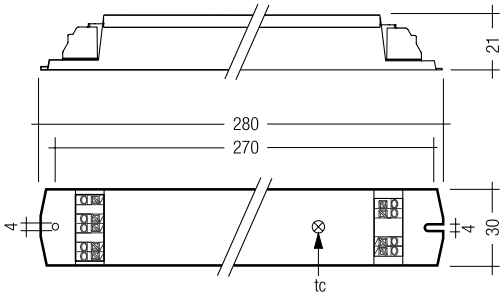

Technical data

Rated supply voltage	220 – 240 V
AC voltage range	198 – 264 V
Rated supply voltage DC	170 – 280 V
Mains frequency	0 / 50 / 60 Hz
Typ. rated current (at 230 V, 50 Hz, full load) ①	0.2 A
Mains current (at 220 V, 0 Hz, full load) ②	0.04 A
Typical ripple current at full load	± 15 %
Leakage current (PE)	0.25 mA
Max. input power	49 W
Typ. efficiency (at 230 V, 50 Hz, full load) ①	90 %
Typ. λ (at 230 V, 50 Hz, full load) ①	0.95
Typ. power input on standby	1 W
Dimming range	3 – 100 %
PWM frequency	400 Hz
Switch-on time (DC mode)	0.4 s
Switch-on time (at 230 V, 50 Hz, acc. to DALI) ①	0.6 s
Switchover time (AC/DC)	0.2 s
Turn off time (at 230 V, 50 Hz, full load)	0.3 s
Hold on time at power failure (output)	20 ms
ta operating (at lifetime 50,000 h)	-20 ... +55 °C
Max. casing temperature tc	75 °C
Dimensions L x W x H	280 x 30 x 21 mm
Hole spacing D	270 mm

Ordering data

Type	Article number	Packaging, carton	Packaging, pallet	Weight per pc.
LCAI 040/0300 I010 one4all 220-240 V	**86459430**	10 pc(s).	960 pc(s).	0.213 kg

Specific technical data

Type	Output current ①	Output current tolerance ①	Output voltage range	Max. output voltage ③	Typ. output power
LCAI 040/0300 I010 one4all 220-240 V	300 mA	± 5 %	60 – 135 V	420 V	40 W

① Valid at 100 % dimming level.
② Valid at 15 % dimming level.
③ In non-load operation.

IP20 RoHS

TALEXconverter LCAI 50 W 350 mA I010 one4all

ECO series

Product description

- Dimmable built-in control gear for LED
- Constant current LED control gear with 350 mA output current
- Output power 50 W
- Nominal life time up to 50,000 h (at ta 55 °C with a failure rate ≤ 0.2 % per 1,000 h)
- 5-year guarantee

Properties

- Low profile metal casing with white cover
- Type of protection IP20

Interfaces

- DALI DEVICE Type 6
- DSI
- switchDIM (with memory function)
- corridorFUNCTION

Functions

- Overload protection
- Overtemperature protection
- Short-circuit proof
- Dimming in DC adjustable
- Suitable for emergency lighting units acc. to EN 50172

→ For product data sheet go to www.tridonic.com, or available on request

Product matrix, page 15

For standards see data sheet

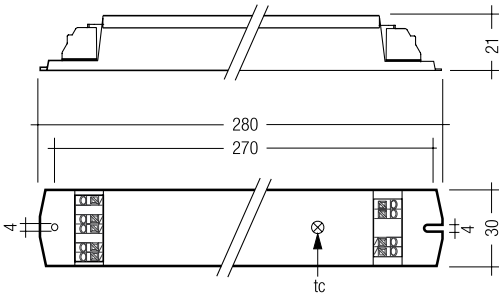

Technical data

Rated supply voltage	220 – 240 V
AC voltage range	198 – 264 V
Rated supply voltage DC	170 – 280 V
Mains frequency	0 / 50 / 60 Hz
Typ. rated current (at 230 V, 50 Hz, full load) ①	0.2 A
Mains current (at 220 V, 0 Hz, full load) ②	0.05 A
Typical ripple current at full load	± 15 %
Leakage current (PE)	0.25 mA
Max. input power	59 W
Typ. efficiency (at 230 V, 50 Hz, full load) ①	90 %
Typ. λ (at 230 V, 50 Hz, full load) ①	0.95
Typ. power input on standby	1 W
Dimming range	3 – 100 %
PWM frequency	400 Hz
Switch-on time (DC mode)	0.4 s
Switch-on time (at 230 V, 50 Hz, acc. to DALI) ①	0.6 s
Switchover time (AC/DC)	0.2 s
Turn off time (at 230 V, 50 Hz, full load)	0.1 s
Hold on time at power failure (output)	20 ms
ta operating (at lifetime 50,000 h)	-20 ... +55 °C
Max. casing temperature tc	75 °C
Dimensions L x W x H	280 x 30 x 21 mm
Hole spacing D	270 mm

Ordering data

Type	Article number	Packaging, carton	Packaging, pallet	Weight per pc.
LCAI 050/0350 I010 one4all 220-240 V	**86459431**	10 pc(s).	960 pc(s).	0.215 kg

Specific technical data

Type	Output current ①	Output current tolerance ①	Output voltage range	Max. output voltage ③	Typ. output power
LCAI 050/0350 I010 one4all 220-240 V	350 mA	± 5 %	60 – 142 V	420 V	50 W

① Valid at 100 % dimming level.
② Valid at 15 % dimming level.
③ In non-load operation.

IP20 RoHS

TALEXconverter LCAI 70 W 300 mA one4all lp
ECO series

Product description
- Dimmable built-in control gear for LED
- Constant current LED control gear with 300 mA output current
- Output power 70 W
- Nominal life time up to 50,000 h (at ta 50 °C with a failure rate max. 0.2 % per 1,000 h)
- 5-year guarantee

Properties
- Low profile metal casing with white cover
- Type of protection IP20

Interfaces
- DALI DEVICE Type 6
- DSI
- switchDIM (with memory function)
- corridorFUNCTION

Functions
- Overload protection
- Overtemperature protection
- Short-circuit proof
- Dimming in DC adjustable
- Suitable for emergency lighting units acc. to EN 50172

→ For product data sheet go to www.tridonic.com, or available on request

Product matrix, page 15

For standards see data sheet

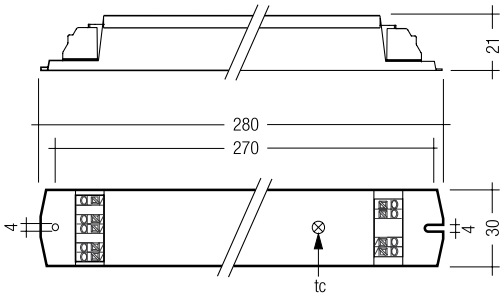

Technical data

Rated supply voltage	220 – 240 V
AC voltage range	198 – 264 V
Rated supply voltage DC	170 – 280 V
Mains frequency	0 / 50 / 60 Hz
Typ. rated current (at 230 V, 50 Hz, full load) ①	360 mA
Rated current (at 230 V, 50 Hz, full load) ②	100 mA
Leakage current (PE)	0.4 mA
Max. input power	77 W
Typ. efficiency (at 230 V, 50 Hz, full load) ①	93 %
Typ. λ (at 230 V, 50 Hz, full load) ①	0.95
Typ. power input on standby	< 1 W
Dimming range	3 – 100 %
PWM frequency	400 Hz
Switch-on time (DC mode)	0.4 s
Switch-on time (at 230 V, 50 Hz, acc. to DALI) ①	0.6 s
Switchover time (AC/DC)	0.2 s
Turn off time (at 230 V, 50 Hz, full load)	0.1 s
Hold on time at power failure (output) ③	4 ms
Ambient temperature ta	-20 ... +50 °C
Max. casing temperature tc	70 °C
Dimensions L x W x H	280 x 30 x 21 mm
Hole spacing D	270 mm

Ordering data

Type	Article number	Packaging, carton	Packaging, pallet	Weight per pc.
LCAI 070/0300 I010 one4all 220-240V	**28000210**	10 pc(s).	960 pc(s).	0.214 kg

Specific technical data

Type	Output current ①	Output current tolerance ①	Output voltage range	Max. output voltage ④	Typ. output power
LCAI 070/0300 I010 one4all 220-240V	300 mA	± 5 %	116 – 240 V	420 V	70 W

① Valid at 100 % dimming level.
② Valid at 15 % dimming level.
③ At power failure.
④ In non-load operation.

IP20 RoHS

TALEXconverter LCAI 80 W 350 mA one4all lp
ECO series

Product description
- Dimmable built-in control gear for LED
- Constant current LED control gear with 350 mA output current
- Output power 80 W
- Nominal life time up to 50,000 h (at ta 50 °C with a failure rate max. 0.2 % per 1,000 h)
- 5-year guarantee

Properties
- Low profile metal casing with white cover
- Type of protection IP20
- No dip-coated (article number 28000211)
- Dip-coated (article number 86459393)

Interfaces
- DALI DEVICE Type 6
- DSI
- switchDIM (with memory function)
- corridorFUNCTION

Functions
- Overload protection
- Overtemperature protection
- Short-circuit proof
- Dimming in DC adjustable
- Suitable for emergency lighting units acc. to EN 50172

→ For product data sheet go to www.tridonic.com, or available on request

→

Product matrix, page 15

For standards see data sheet

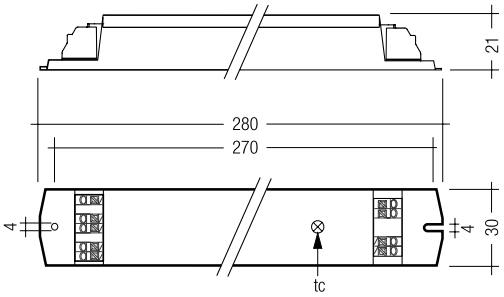

Technical data

Rated supply voltage	220 – 240 V
AC voltage range	198 – 264 V
Rated supply voltage DC	170 – 280 V
Mains frequency	0 / 50 / 60 Hz
Typ. rated current (at 230 V, 50 Hz, full load) ①	380 mA
Rated current (at 230 V, 50 Hz, full load) ②	100 mA
Leakage current (PE)	0.4 mA
Max. input power	92 W
Typ. efficiency (at 230 V, 50 Hz, full load) ①	92 %
Typ. λ (at 230 V, 50 Hz, full load) ①	0.95
Typ. power input on standby	< 1 W
Dimming range	3 – 100 %
PWM frequency	400 Hz
Switch-on time (DC mode)	0.4 s
Switch-on time (at 230 V, 50 Hz, acc. to DALI) ①	0.6 s
Switchover time (AC/DC)	0.2 s
Turn off time (at 230 V, 50 Hz, full load)	0.1 s
Hold on time at power failure (output) ③	4 ms
Ambient temperature ta	-20 ... +50 °C
Max. casing temperature tc	70 °C
Dimensions L x W x H	280 x 30 x 21 mm
Hole spacing D	270 mm

Ordering data

Type	Article number	Packaging, carton	Packaging, pallet	Weight per pc.
LCAI 080/0350 I010 one4all 220-240V	**28000211**	10 pc(s).	960 pc(s).	0.218 kg

Specific technical data

Type	Output current ①	Output current tolerance ①	Output voltage range	Max. output voltage ④	Typ. output power
LCAI 080/0350 I010 one4all 220-240V	350 mA	± 5 %	116 – 230 V	420 V	80 W

① Valid at 100 % dimming level.
② Valid at 15 % dimming level.
③ At power failure.
④ In non-load operation.

IP20 RoHS

TALEXconverter LCAI 80 W 700 mA one4all lp
ECO series

Product description
- Dimmable built-in control gear for LED
- Constant current LED control gear with 700 mA output current
- Output power 80 W
- Nominal life time up to 50,000 h (at ta 45 °C with a failure rate max. 0.2 % per 1,000 h)
- 5-year guarantee

Properties
- Low profile metal casing with white cover
- Type of protection IP20

Interfaces
- DALI DEVICE Type 6
- DSI
- switchDIM (with memory function)
- corridorFUNCTION

Functions
- Overload protection
- Overtemperature protection
- Short-circuit proof
- Dimming in DC adjustable
- Suitable for emergency lighting units acc. to EN 50172

→ For product data sheet go to www.tridonic.com, or available on request

Product matrix, page 15

For standards see data sheet

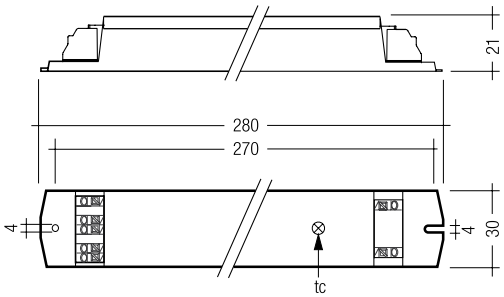

Technical data

Rated supply voltage	220 – 240 V
AC voltage range	198 – 264 V
Rated supply voltage DC	170 – 280 V
Mains frequency	0 / 50 / 60 Hz
Typ. rated current (at 230 V, 50 Hz, full load) ①	410 mA
Rated current (at 230 V, 50 Hz, full load) ②	100 mA
Leakage current (PE)	0.4 mA
Max. input power	92 W
Typ. efficiency (at 230 V, 50 Hz, full load) ①	92 %
Typ. λ (at 230 V, 50 Hz, full load) ①	0.95
Typ. power input on standby	< 1 W
Dimming range	3 – 100 %
PWM frequency	400 Hz
Switch-on time (DC mode)	0.4 s
Switch-on time (at 230 V, 50 Hz, acc. to DALI) ①	0.6 s
Switchover time (AC/DC)	0.2 s
Turn off time (at 230 V, 50 Hz, full load)	0.1 s
Hold on time at power failure (output) ③	4 ms
Ambient temperature ta	-20 ... +45 °C
Max. casing temperature tc	75 °C
Dimensions L x W x H	280 x 30 x 21 mm
Hole spacing D	270 mm

Ordering data

Type	Article number	Packaging, carton	Packaging, pallet	Weight per pc.
LCAI 080/0700 I010 one4all 220-240V	**28000212**	10 pc(s).	960 pc(s).	0.22 kg

Specific technical data

Type	Output current ①	Output current tolerance ①	Output voltage range	Max. output voltage ④	Typ. output power
LCAI 080/0700 I010 one4all 220-240V	700 mA	± 5 %	50 – 120 V	420 V	80 W

① Valid at 100 % dimming level.
② Valid at 15 % dimming level.
③ At power failure.
④ In non-load operation.

IP67 **SELV Class 2** RoHS

TALEXconverter LCU 15 W 12 V outdoor IP67

LCU outdoor IP67

Product description

- Constant voltage LED control gear
- Universal input voltage range
- Constant output voltage
- Connection: cable with end sleeves (length approx. 500 mm)
- Polarity identifiers, secondary + red / - black
- Metal casing, encapsulated
- Nominal life time up to 50,000 h (at ta 40 °C with a failure rate max. 0.2 % per 1,000 h)
- 5-year guarantee
- Complies with CLASS C from minimum to maximum load range according to EN 61000-3-2

Properties

- High efficiency
- Low power loss
- Overtemperature protection
- Overload protection by restricting output
- Short-circuit shutdown feature with automatic restart
- SELV
- Type of protection IP67
- Metal casing

→ For product data sheet go to www.tridonic.com, or available on request

→

For standards see data sheet

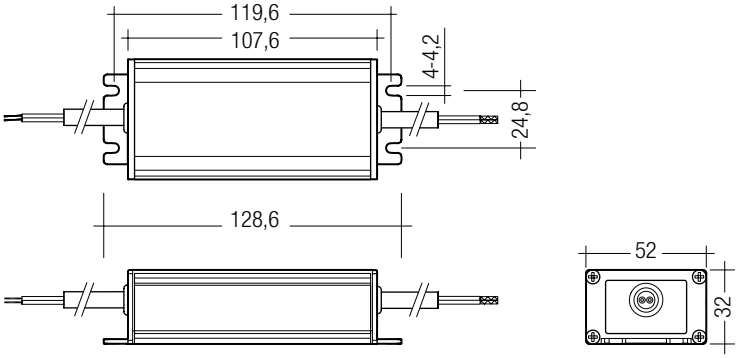

Technical data

Rated supply voltage	120 – 240 V
Input voltage, AC	108 – 264 V
Rated current (at 230 V, 50 Hz)	0.21 A
Mains frequency	50 / 60 Hz
Efficiency	> 75 %
λ (at 230 V, 50 Hz)	0.4
Output voltage tolerance	+ 10 %
Output power	15 W
Output power range	1 – 15 W
Turn on time (output)	≤ 0.5 s
Turn off time (output)	≤ 1 s
Hold on time at power failure (output)	10 ms
Ambient temperature ta	-25 ... +50 °C
Ambient temperature ta (at lifetime 50,000 h)	-25 ... +40 °C
Storage temperature ts	-30 ... +85 °C
Dimensions L x W x H	129 x 52 x 32 mm
Hole spacing D	120 mm

Ordering data

Type	Article number	Packaging, carton	Packaging, pallet	Weight per pc.
LCU 015/12 D010	**24166316**	20 pc(s).	800 pc(s).	0.4 kg

Specific technical data

Type	Max. casing temperature tc	Output voltage	Max. input power	Output current range	Max. output voltage ①
LCU 015/12 D010	70 °C	12 V	18 W	0.08 – 1.25 A	13.2 V

① At failure mode (230 V, 50 Hz).

IP67 **SELV Class 2** RoHS

TALEX(converter LCU 35 W 12 V outdoor IP67

LCU outdoor IP67

Product description

- Constant voltage LED control gear
- Universal input voltage range
- Constant output voltage
- Connection: cable with end sleeves (length approx. 500 mm)
- Polarity identifiers, secondary + red / - black
- Metal casing, encapsulated
- Nominal life time up to 50,000 h (at ta 40 °C with a failure rate max. 0.2 % per 1,000 h)
- 5-year guarantee
- Complies with CLASS C from minimum to maximum load range according to EN 61000-3-2

Properties

- High efficiency
- Low power loss
- Overtemperature and overload protection
- Short-circuit shutdown feature with automatic restart
- SELV
- Type of protection IP67
- Metal casing

→ For product data sheet go to www.tridonic.com, or available on request

→

For standards see data sheet

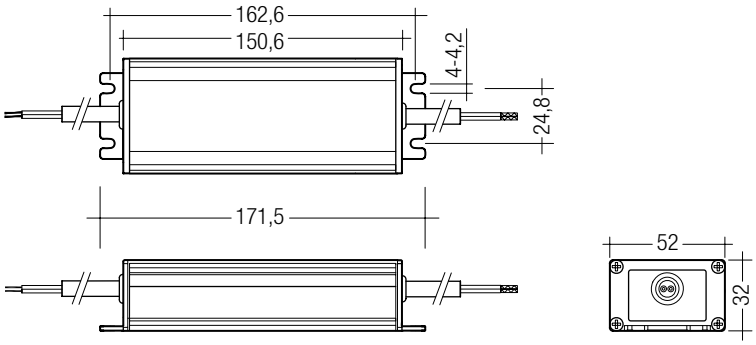

Technical data

Rated supply voltage	120 – 240 V
Input voltage, AC	108 – 264 V
Rated current (at 230 V, 50 Hz)	0.2 A
Mains frequency	50 / 60 Hz
Efficiency	> 80 %
λ (at 230 V, 50 Hz)	> 0.91
Output voltage tolerance	+ 10 %
Output power	35 W
Output power range	3.5 – 35 W
Turn on time (output)	≤ 0.5 s
Turn off time (output)	≤ 1 s
Hold on time at power failure (output)	10 ms
Ambient temperature ta	-25 ... +50 °C
Ambient temperature ta (at lifetime 50,000 h)	-25 ... +40 °C
Storage temperature ts	-30 ... +85 °C
Dimensions L x W x H	172 x 52 x 32 mm
Hole spacing D	163 mm

Ordering data

Type	Article number	Packaging, carton	Packaging, pallet	Weight per pc.
LCU 035/12 D010	**24166318**	20 pc(s).	600 pc(s).	0.55 kg

Specific technical data

Type	Max. casing temperature tc	Output voltage	Max. input power	Output current range	Max. output voltage ①
LCU 035/12 D010	80 °C	12 V	42 W	0.25 – 2.91 A	13.2 V

① At failure mode (230 V, 50 Hz).

IP67 **SELV Class 2** RoHS

TALEXconverter LCU 60 W 12/24 V outdoor IP67

LCU outdoor IP67

Product description

- Constant voltage LED control gear
- Universal input voltage range
- Constant output voltage
- Connection: cable with end sleeves (length approx. 500 mm)
- Polarity identifiers, secondary + red / - black
- Metal casing, encapsulated
- Nominal life time up to 50,000 h (at ta 40 °C with a failure rate max. 0.2 % per 1,000 h)
- 5-year guarantee
- Complies with CLASS C from minimum to maximum load range according to EN 61000-3-2

Properties

- High efficiency
- Low power loss
- Overtemperature and overload protection
- Short-circuit shutdown feature with automatic restart
- SELV
- Type of protection IP67
- Metal casing

→ For product data sheet go to www.tridonic.com, or available on request

→

For standards see data sheet

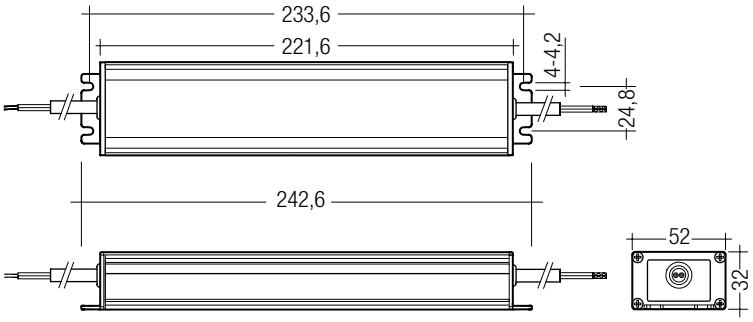

Technical data

Rated supply voltage	120 – 240 V
Input voltage, AC	108 – 264 V
Rated current (at 230 V, 50 Hz)	0.33 A
Mains frequency	50 / 60 Hz
Efficiency	> 80 %
λ (at 230 V, 50 Hz)	0.93
Output voltage tolerance	+ 10 %
Output power	60 W
Output power range	5 – 60 W
Turn on time (output)	≤ 0.5 s
Turn off time (output)	≤ 1 s
Hold on time at power failure (output)	10 ms
Ambient temperature ta	-25 ... +50 °C
Ambient temperature ta (at lifetime 50,000 h)	-25 ... +40 °C
Storage temperature ts	-30 ... +85 °C
Dimensions L x W x H	243 x 52 x 32 mm
Hole spacing D	234 mm

Ordering data

Type	Article number	Packaging, carton	Packaging, pallet	Weight per pc.
LCU 060/12 D010	**24166322**	10 pc(s).	400 pc(s).	0.8 kg
LCU 060/24 D010	**22185184**	10 pc(s).	400 pc(s).	0.7 kg

Specific technical data

Type	Max. casing temperature tc	Output voltage	Max. input power	Output current range	Max. output voltage ①
LCU 060/12 D010	85 °C	12 V	75 W	0.4 – 5.0 A	13.2 V
LCU 060/24 D010	70 °C	24 V	75 W	0.2 – 2.5 A	26.4 V

① At failure mode (230 V, 50 Hz).

IP67 SELV RoHS

TALEXconverter LCU 100 W 12/24 V outdoor IP67

LCU outdoor IP67

Product description

- Constant voltage LED control gear
- Universal input voltage range
- Constant output voltage
- Connection: cable with end sleeves (length approx. 2,000 mm)
- Polarity identifiers, secondary + red / - black
- Metal casing, encapsulated
- Nominal life time up to 50,000 h (at ta 40 °C with a failure rate max. 0.2 % per 1,000 h)
- 5-year guarantee
- Complies with CLASS C from minimum to maximum load range according to EN 61000-3-2

Properties

- High efficiency
- Low power loss
- Overtemperature protection with automatic restart
- Overload protection
- Short-circuit protection with automatic restart
- SELV
- Type of protection IP67
- Metal casing

→ For product data sheet go to www.tridonic.com, or available on request

For standards see data sheet

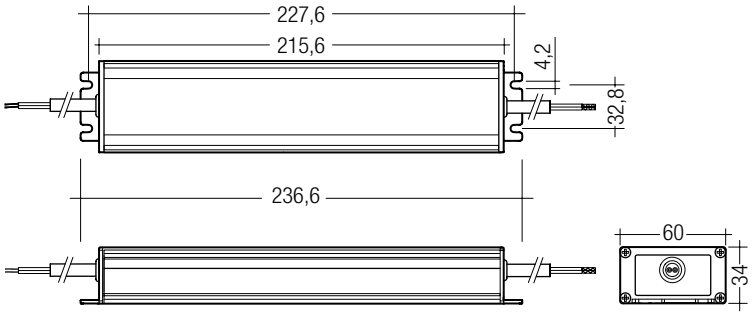

Technical data

Rated supply voltage	120 – 240 V
Input voltage, AC	108 – 264 V
Rated current (at 230 V, 50 Hz)	0.55 A
Mains frequency	50 / 60 Hz
Efficiency	> 85 %
λ (at 230 V, 50 Hz)	0.95
Output voltage tolerance	+ 10 %
Output power	100 W
Output power range	10 – 100 W
Turn on time (output)	≤ 0.5 s
Turn off time (output)	≤ 1 s
Hold on time at power failure (output)	10 ms
Ambient temperature ta	-25 ... +50 °C
Ambient temperature ta (at lifetime 50,000 h)	-25 ... +40 °C
Storage temperature ts	-30 ... +85 °C
Dimensions L x W x H	237 x 60 x 34 mm
Hole spacing D	228 mm

Ordering data

Type	Article number	Packaging, carton	Packaging, pallet	Weight per pc.
LCU 100/12 D010	**24166326**	10 pc(s).	300 pc(s).	1.2 kg
LCU 100/24 D010	**22185185**	6 pc(s).	144 pc(s).	1.4 kg

Specific technical data

Type	Max. casing temperature tc	Output voltage	Max. input power	Output current range	Max. output voltage ①
LCU 100/12 D010	85 °C	12 V	118 W	0.80 – 8 A	13.2 V
LCU 100/24 D010	65 °C	24 V	118 W	0.40 – 4 A	26.4 V

① At failure mode (230 V, 50 Hz).

IP67 SELV RoHS

TALEXconverter LCU 150 W 12/24 V outdoor IP67

LCU outdoor IP67

Product description

- Constant voltage LED control gear
- Universal input voltage range
- Constant output voltage
- Connection: cable with end sleeves (length approx. 2,000 mm)
- Polarity identifiers, secondary + red / - black
- Metal casing, encapsulated
- Nominal life time up to 50,000 h (at ta 40 °C with a failure rate max. 0.2 % per 1,000 h)
- 5-year guarantee
- Complies with CLASS C from minimum to maximum load range according to EN 61000-3-2

Properties

- High efficiency
- Low power loss
- Overtemperature and overload protection
- Short-circuit shutdown feature with automatic restart
- SELV
- Type of protection IP67
- Metal casing

→ For product data sheet go to www.tridonic.com, or available on request

→

For standards see data sheet

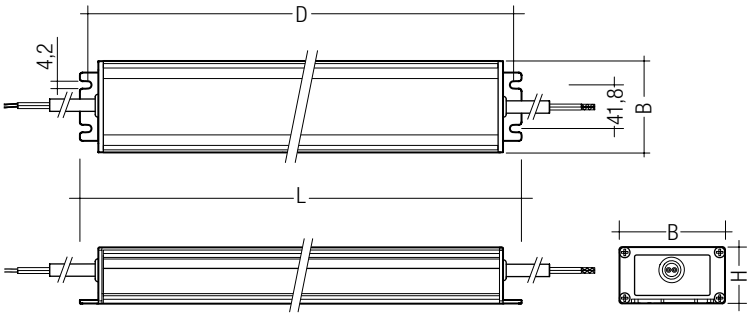

Technical data

Rated supply voltage	120 – 240 V
Input voltage, AC	108 – 264 V
Rated current (at 230 V, 50 Hz)	0.77 A
Mains frequency	50 / 60 Hz
Efficiency	> 88 %
λ (at 230 V, 50 Hz)	0.95
Output voltage tolerance	+ 10 %
Output power	150 W
Output power range	20 – 150 W
Turn on time (output)	≤ 0.5 s
Turn off time (output)	≤ 1 s
Hold on time at power failure (output)	10 ms
Ambient temperature ta	-25 ... +50 °C
Ambient temperature ta (at lifetime 50,000 h)	-25 ... +40 °C
Storage temperature ts	-30 ... +85 °C

Ordering data

Type	Article number	Packaging, carton	Packaging, pallet	Weight per pc.
LCU 150/12 D010	**24166331**	6 pc(s).	192 pc(s).	1.6 kg
LCU 150/24 D010	**22185186**	6 pc(s).	144 pc(s).	1.7 kg

Specific technical data

Type	Max. casing temperature tc	Output voltage	Max. input power	Output current range	Max. output voltage ①	Dimensions L x W x H	Hole spacing D
LCU 150/12 D010	85 °C	12 V	176 W	1.25 – 12.50 A	13.2 V	247 x 69 x 38 mm	137.6 mm
LCU 150/24 D010	70 °C	24 V	176 W	0.62 – 6.25 A	26.4 V	270 x 70 x 37 mm	257.0 mm

① At failure mode (230 V, 50 Hz).

IP 65 SELV RoHS

TALEXconverter LED 0010 K301 12/24 V

LCU outdoor IP65

Product description

- Constant voltage LED control gear
- For TALEXmodule
- Short-circuit protection with automatic restart
- Overtemperature protection
- Overload protection by restricting output
- Constant output voltage
- Compact slimline casing
- Connection: cable with end sleeves (length approx. 150 mm)
- SELV
- Type of protection IP65
- Cross-section of primary side: 0.75 mm², secondary side: 0.5 mm²

→ For product data sheet go to www.tridonic.com, or available on request

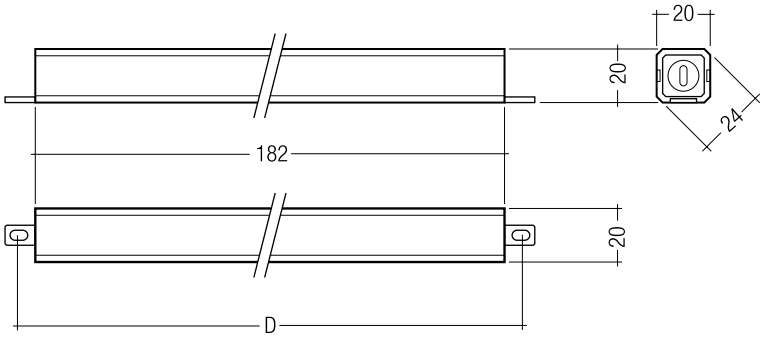

Technical data

Rated supply voltage	230 – 240 V
Input voltage, AC	200 – 254 V
Input voltage, DC ①	200 – 240 (160) V
Rated current (at 230 V, 50 Hz)	0.085 A
Mains frequency	0 / 50 / 60 Hz
Efficiency	> 80 %
Output power range	1 – 10 W
Ambient temperature ta	-20 ... +50 °C
Max. casing temperature tc	70 °C
Dimensions L x W x H	182 x 20 x 20 mm
Hole spacing D	194 mm

Ordering data

Type	Article number	Output voltage	Packaging, carton	Weight per pc.
LED 0010 K301 230-240/12V 10VA	**86456206**	12 V	30 pc(s).	0.060 kg
LED 0010 K301 230-240/24V 10VA	**86456215**	24 V	30 pc(s).	0.061 kg

① After power up with higher voltage, the device will work with a reduced voltage as specified above.

→

For standards see data sheet

SELV RoHS

TALEXconverter 0010 K001 12/24 V

LCU indoor IP20

Product description

- Constant voltage LED control gear
- Constant output voltage

Properties

- Compact dimensions
- Overtemperature and overload protection with power regulation
- Short-circuit protection with automatic restart
- Type of protection IP20
- Casing: nylon natural white 66
- Connecting cable, supply side: H03VV-F, H05VV-F (length approx. 140 mm)
- Connection: cable with end sleeves (length approx. 200 mm)

→ For product data sheet go to www.tridonic.com, or available on request

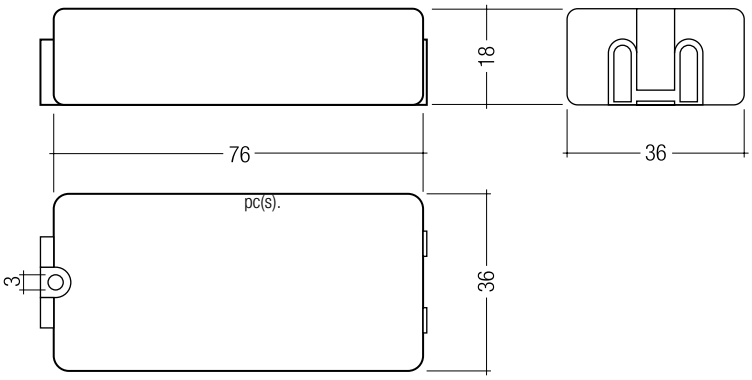

Technical data

Rated supply voltage	220 – 240 V
Input voltage, AC	198 – 254 V
Input voltage, DC	176 – 280 V
Mains frequency	0 / 50 / 60 Hz
Efficiency	> 60 %
Ambient temperature ta	-25 ... +50 °C
Dimensions L x W x H	76 x 36 x 18 mm

Ordering data

Type	Article number	Secondary voltage DC	Packaging, carton	Weight per pc.
0010 K001 12 V	**86453116**	12 V	40 pc(s).	0.048 kg
0010 K001 24 V	**86453122**	24 V	40 pc(s).	0.046 kg

→

For standards see data sheet

Specific technical data

Type	Output power	Rated current (at 230 V, 50 Hz)	Max. casing temperature tc
0010 K001 12 V	1 – 10 W	93 mA	70 °C
0010 K001 24 V	1 – 10 W	95 mA	65 °C

SELV RoHS

TALEXconverter 0025 K201 24 V

LCU indoor IP20

Product description

- Constant voltage LED control gear
- For TALEXmodule
- Short-circuit protection with automatic restart
- DC supply possible
- Cage-type screw terminal
- 6-pole terminal on secondary side
- Rapid installation of cable clamp and terminal cover, no tool required
- Cross-section of connecting cable: 2.5 mm²
- Connecting cable, supply side: H03VV-F, H05VV-F

→ For product data sheet go to www.tridonic.com, or available on request

Technical data

Rated supply voltage	220 – 240 V
Input voltage, AC	198 – 254 V
Input voltage range, DC ①	200 – 240 (160) V
Rated current (at 230 V, 50 Hz)	0.13 A
Mains frequency	0 / 50 / 60 Hz
Efficiency	> 82 %
Max. input power	30 W
Output power	25 W
Ambient temperature ta	-25 ... +45 °C
Dimensions L x W x H	167 x 42 x 31 mm
Hole spacing D	143 – 148 mm

→

For standards see data sheet

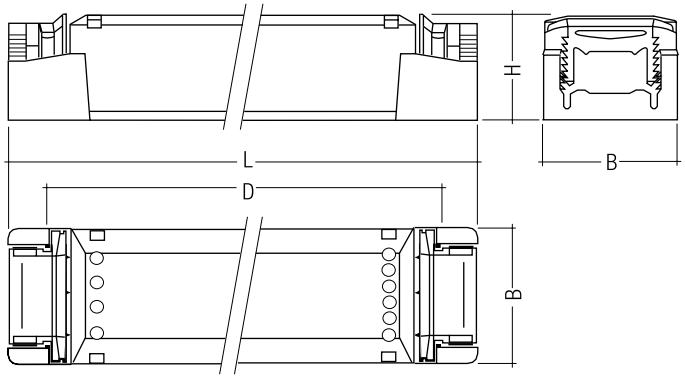

Ordering data

Type	Article number	Secondary voltage DC	Packaging, carton	Weight per pc.
0025 K201 24 V	**86453418**	24 V	20 pc(s).	0.189 kg

① After power up with higher voltage, the device will work with a reduced voltage as specified above.

SELV RoHS

TALEXconverter 0025 K210 24 V one4all

LCU indoor IP20

Product description

- 1-channel one4all LED control gear
- For 24 V LED modules
- Dimming range 0.1 to 100 %
- switchDIM-MEMORY
- Short-circuit protection with automatic restart
- DC supply possible
- Rapid installation of cable clamp and terminal cover, no tool required
- Overtemperature protection
- 1 addressable and dimmable PWM output channel and 1 fixed 24 V output channel
- Cross-section of connecting cable: 2.5 mm^2
- Connecting cable, supply side: H03VV-F, H05VV-F
- PWM signal output: 24 V DC
- Load range: 0.1 – 25 W

→ For product data sheet go to www.tridonic.com, or available on request

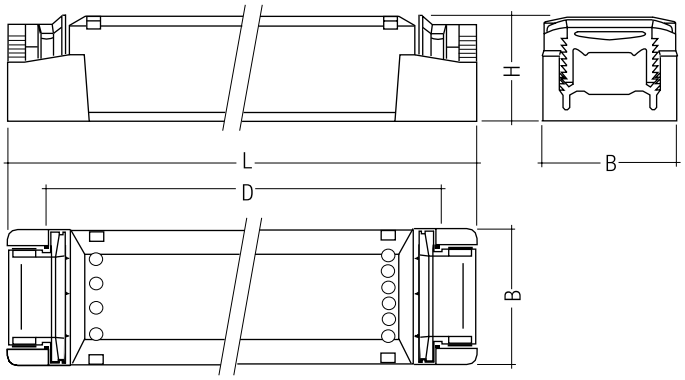

Technical data

Rated supply voltage	230 V
Input voltage, AC	198 – 254 V
Input voltage range, DC ①	200 – 240 (160) V
Rated current (at 230 V, 50 Hz)	0.13 A
Mains frequency	0 / 50 / 60 Hz
Efficiency	> 82 %
Max. input power	31 W
Output power	25 W (max. sum of fixed and dimmable output)
PWM frequency	1 kHz
Dimming	DSI, DALI, switchDIM – single momentary-action switch
Ambient temperature ta	-25 ... +45 °C
Dimensions L x W x H	167 x 42 x 31 mm
Hole spacing D	143 – 148 mm

Ordering data

Type	Article number	Secondary voltage DC	Packaging, carton	Weight per pc.
0025 K210 24 V	**86455937**	24 V	20 pc(s).	0.155 kg

① After power up with higher voltage, the device will work with a reduced voltage as specified above.

→

For standards see data sheet

SELV RoHS

TALEXconverter 0025 K211 24 V

LCU indoor IP20

Product description

- 3-channel DALI dimming controller
- For 24 V LED modules
- Dimming range 0.1 to 100 %
- With integrated sequencer for standalone operation (factory default: activated)
- Overtemperature protection
- Short-circuit shutdown feature with automatic restart
- DC supply possible
- DALI control input
- 3 addressable output channels
- Cage-type screw terminal
- 6-pole terminal on secondary side
- Rapid installation of cable clamp and terminal cover, no tool required
- Cross-section of connecting cable: 2.5 mm²
- Connecting cable, supply side: H03VV-F, H05VV-F
- Load range: 0.1 – 25 W

→ For product data sheet go to www.tridonic.com, or available on request

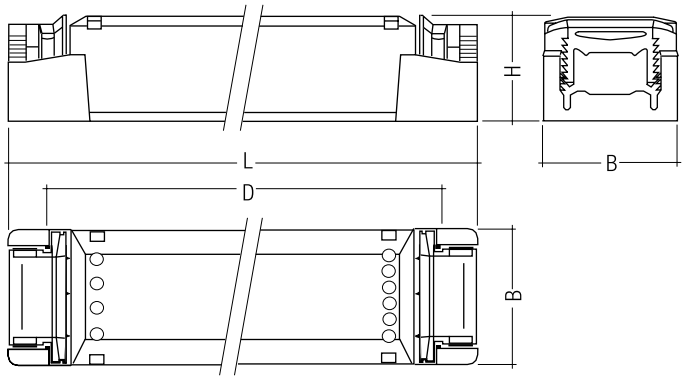

Technical data

Rated supply voltage	230 V
Input voltage, AC	198 – 254 V
Input voltage range, DC ①	200 – 240 (160) V
Rated current (at 230 V, 50 Hz)	0.13 A
Mains frequency	0 / 50 / 60 Hz
Efficiency	> 82 %
Max. input power	30 W
Output power	3 x 8 W
PWM frequency	125 Hz
Dimming	DALI
Ambient temperature ta	-25 ... +45 °C
Dimensions L x W x H	167 x 42 x 31 mm
Hole spacing D	143 – 148 mm

Ordering data

Type	Article number	Secondary voltage DC	Packaging, carton	Weight per pc.
0025 K211 24 V	**86455066**	24 V	20 pc(s).	0.155 kg

① After power up with higher voltage, the device will work with a reduced voltage as specified above.

→

For standards see data sheet

IP20 **SELV Class 2** RoHS

TALEXconverter LCU 35 W 12/24 V indoor IP20

LCU indoor IP20

Product description

- Constant voltage LED control gear
- Universal input voltage range
- Constant output voltage
- Nominal life time up to 50,000 h (at ta 40 °C with a failure rate max. 0.2 % per 1,000 h)
- 5-year guarantee
- 24 V LED control gear: suitable for emergency installations according to EN50172
- Complies with CLASS C from minimum to maximum load range according to EN 61000-3-2

Properties

- High efficiency
- Low power loss
- Overtemperature and overload protection
- Short-circuit shutdown feature with automatic restart
- Protection class II, SELV
- Type of protection IP20
- Plastic casing white

→ For product data sheet go to www.tridonic.com, or available on request

For standards see data sheet

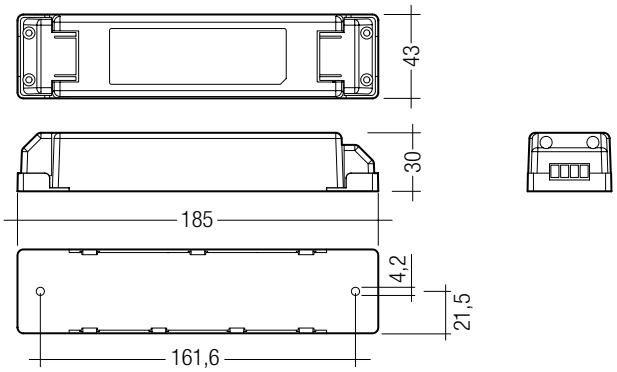

Technical data

Rated supply voltage	120 – 240 V
Input voltage, AC	108 – 264 V
Input voltage, DC ①	120 – 288 V
Rated current (at 230 V, 50 Hz)	0.2 A
Mains frequency ①	0 / 50 / 60 Hz
Efficiency	> 80 %
λ (at 230 V, 50 Hz)	0.91
Output voltage tolerance	+ 10 %
Output power	35 W
Output power range	3 – 35 W
Turn on time (output)	≤ 0.5 s
Turn off time (output)	≤ 1 s
Hold on time at power failure (output)	10 ms
Ambient temperature ta	-25 ... +50 °C
Ambient temperature ta (at lifetime 50,000 h)	-25 ... +40 °C
Storage temperature ts	-30 ... +85 °C
Dimensions L x W x H	185 x 43 x 30 mm
Hole spacing D	162 mm

Ordering data

Type	Article number	Packaging, carton	Packaging, pallet	Weight per pc.
LCU 035/12 E020	**24166319**	40 pc(s).	1,800 pc(s).	0.24 kg
LCU 035/24 E020	**24166320**	40 pc(s).	1,800 pc(s).	0.27 kg

Specific technical data

Type	Max. casing temperature tc	Output voltage	Max. input power	Output current range	Max. output voltage ②
LCU 035/12 E020	75 °C	12 V	42 W	0.25 – 2.91 A	13.2 V
LCU 035/24 E020	75 °C	24 V	41 W	0.12 – 1.45 A	26.4 V

① DC operation only with 24 V LED control gear.
② At failure mode (230 V, 50 Hz).

IP20 **SELV Class 2** RoHS

TALEXconverter LCU 60 W 12/24 V indoor IP20

LCU indoor IP20

Product description

- Constant voltage LED control gear
- Universal input voltage range
- Constant output voltage
- Nominal life time up to 50,000 h (at ta 40 °C with a failure rate max. 0.2 % per 1,000 h)
- 5-year guarantee
- 24 V LED control gear: suitable for emergency installations according to EN50172
- Complies with CLASS C from minimum to maximum load range according to EN 61000-3-2

Properties

- High efficiency
- Low power loss
- Overtemperature and overload protection
- Short-circuit shutdown feature with automatic restart
- Protection class II, SELV
- Type of protection IP20
- Plastic casing white

→ For product data sheet go to www.tridonic.com, or available on request

For standards see data sheet

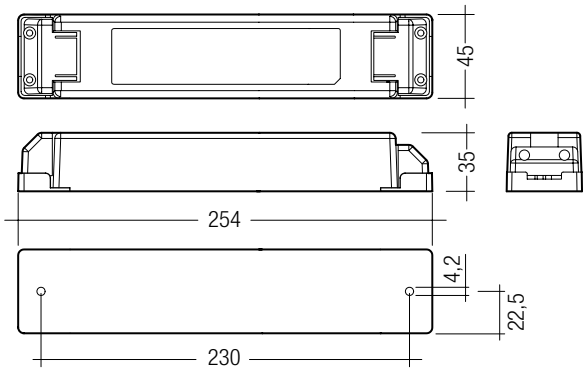

Technical data

Rated supply voltage	120 – 240 V
Input voltage, AC	108 – 264 V
Input voltage, DC ①	120 – 288 V
Rated current (at 230 V, 50 Hz)	0.33 A
Mains frequency ①	0 / 50 / 60 Hz
Efficiency	> 80 %
λ (at 230 V, 50 Hz)	0.93
Output voltage tolerance	+ 10 %
Output power	60 W
Output power range	5 – 60 W
Turn on time (output)	≤ 0.5 s
Turn off time (output)	≤ 1 s
Hold on time at power failure (output)	10 ms
Ambient temperature ta	-25 ... +50 °C
Ambient temperature ta (at lifetime 50,000 h)	-25 ... +40 °C
Storage temperature ts	-30 ... +85 °C
Dimensions L x W x H	254 x 45 x 35 mm
Hole spacing D	230 mm

Ordering data

Type	Article number	Packaging, carton	Packaging, pallet	Weight per pc.
LCU 060/12 E020	**24166323**	20 pc(s).	720 pc(s).	0.5 kg
LCU 060/24 E020	**24166324**	20 pc(s).	720 pc(s).	0.5 kg

Specific technical data

Type	Max. casing temperature tc	Output voltage	Max. input power	Output current range	Max. output voltage ②
LCU 060/12 E020	75 °C	12 V	75 W	0.4 – 5.0 A	13.2 V
LCU 060/24 E020	75 °C	24 V	75 W	0.2 – 2.5 A	26.4 V

① DC operation only with 24 V LED control gear.
② At failure mode (230 V, 50 Hz).

IP20 SELV RoHS

TALEXconverter LCU 100 W 12/24 V indoor IP20

LCU indoor IP20

Product description

- Constant voltage LED control gear
- Universal input voltage range
- Constant output voltage
- Nominal life time up to 50,000 h (at ta 40 °C with a failure rate max. 0.2 % per 1,000 h)
- 5-year guarantee
- 24 V LED control gear: suitable for emergency installations according to EN50172
- Complies with CLASS C from minimum to maximum load range according to EN 61000-3-2

Properties

- High efficiency
- Low power loss
- Overtemperature and overload protection
- Short-circuit shutdown feature with automatic restart
- Protection class II, SELV
- Type of protection IP20
- Plastic casing white

→ For product data sheet go to www.tridonic.com, or available on request

→

For standards see data sheet

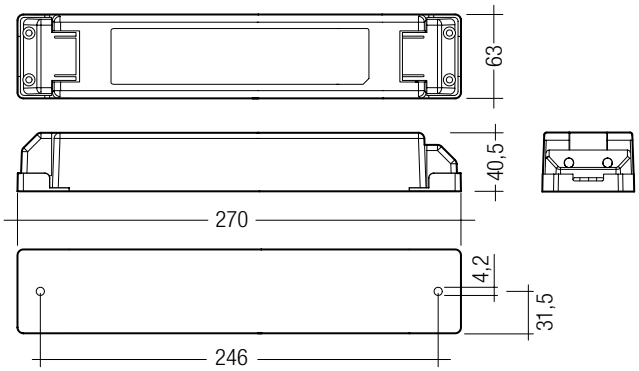

Technical data

Rated supply voltage	120 – 240 V
Input voltage, AC	108 – 264 V
Input voltage, DC ①	120 – 288 V
Rated current (at 230 V, 50 Hz)	0.54 A
Mains frequency ①	0 / 50 / 60 Hz
Efficiency	> 85 %
λ (at 230 V, 50 Hz)	0.95
Output voltage tolerance	+ 10 %
Output power	100 W
Output power range	10 – 100 W
Turn on time (output)	≤ 0.5 s
Turn off time (output)	≤ 1 s
Hold on time at power failure (output)	10 ms
Ambient temperature ta	-25 ... +50 °C
Ambient temperature ta (at lifetime 50,000 h)	-25 ... +40 °C
Storage temperature ts	-30 ... +85 °C
Dimensions L x W x H	270 x 63 x 40.5 mm
Hole spacing D	246 mm

Ordering data

Type	Article number	Packaging, carton	Packaging, pallet	Weight per pc.
LCU 100/12 E020	**24166327**	20 pc(s).	640 pc(s).	0.65 kg
LCU 100/24 E020	**24166328**	20 pc(s).	640 pc(s).	0.66 kg

Specific technical data

Type	Max. casing temperature tc	Output voltage	Max. input power	Output current range	Max. output voltage ②
LCU 100/12 E020	80 °C	12 V	118 W	0.8 – 8 A	13.2 V
LCU 100/24 E020	80 °C	24 V	120 W	0.4 – 4 A	26.4 V

① DC operation only with 24 V LED control gear.
② At failure mode (230 V, 50 Hz).

IP20 SELV RoHS

TALEXconverter LCU 150 W 12/24 V indoor IP20

LCU indoor IP20

Product description

- Constant voltage LED control gear
- Universal input voltage range
- Constant output voltage
- Nominal life time up to 50,000 h (at ta 40 °C with a failure rate max. 0.2 % per 1,000 h)
- 5-year guarantee
- 24 V LED control gear: suitable for emergency installations according to EN50172
- Complies with CLASS C from minimum to maximum load range according to EN 61000-3-2

Properties

- High efficiency
- Low power loss
- Overtemperature and overload protection
- Short-circuit shutdown feature with automatic restart
- Protection class II, SELV
- Type of protection IP20
- Plastic casing white

→ For product data sheet go to www.tridonic.com, or available on request

For standards see data sheet

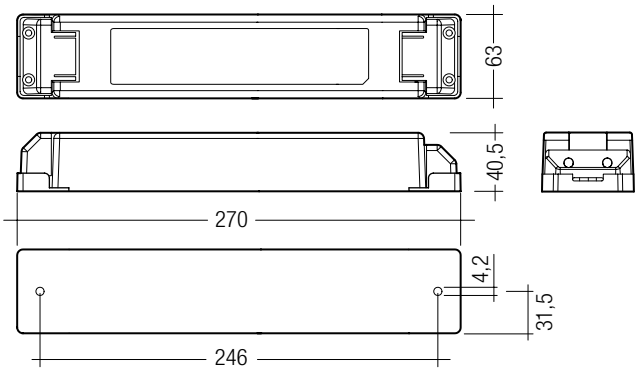

Technical data

Rated supply voltage	120 – 240 V
Input voltage, AC	108 – 264 V
Input voltage, DC ①	120 – 288 V
Rated current (at 230 V, 50 Hz)	0.77 A
Mains frequency ①	0 / 50 / 60 Hz
Efficiency	> 88 %
λ (at 230 V, 50 Hz)	0.95
Output voltage tolerance	+ 10 %
Output power	150 W
Output power range	20 – 150 W
Turn on time (output)	≤ 0.5 s
Turn off time (output)	≤ 1 s
Hold on time at power failure (output)	10 ms
Ambient temperature ta	-25 ... +50 °C
Ambient temperature ta (at lifetime 50,000 h)	-25 ... +40 °C
Storage temperature ts	-30 ... +85 °C
Dimensions L x W x H	270 x 63 x 40.5 mm
Hole spacing D	246 mm

Ordering data

Type	Article number	Packaging, carton	Packaging, pallet	Weight per pc.
LCU 150/12 E020	**24166332**	20 pc(s).	640 pc(s).	0.8 kg
LCU 150/24 E020	**24166333**	20 pc(s).	640 pc(s).	0.8 kg

Specific technical data

Type	Max. casing temperature tc	Output voltage	Max. input power	Output current range	Max. output voltage ②
LCU 150/12 E020	80 °C	12 V	176 W	1.25 – 12.50 A	13.2 V
LCU 150/24 E020	90 °C	24 V	174 W	0.62 – 6.25 A	26.4 V

① DC operation only with 24 V LED control gear.
② At failure mode (230 V, 50 Hz).

TALEXcontrol C350-2 4-channel

Dimmable

Product description

- 4-channel PWM dimmer
- For 350 mA LED modules
- Dimming range 1 to 100 %
- Suitable for combining with TALEXcontrol C002, TALEXconverter K210 and K211
- With integrated cable clamp and terminal cover
- High input voltage range
- Compact dimensions
- Precise load balancing per output channel
- Universal PWM control inputs
- 4 control inputs
- 350 mA PWM output signal
- Connecting cable, supply side: H03VV-F, H05VV-F

→ For product data sheet go to www.tridonic.com, or available on request

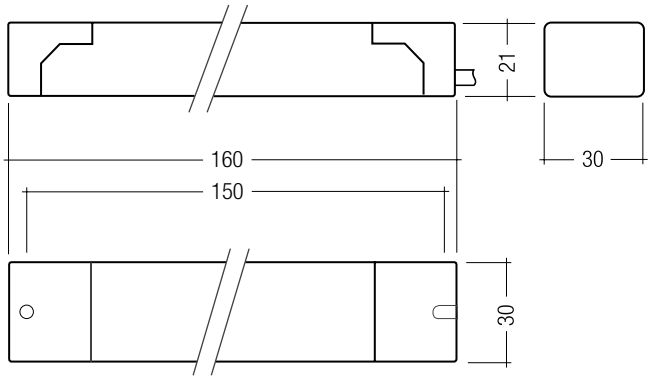

Technical data

Input voltage, DC ①	24 – 48 V (SELV)
Max. supply current	1.5 A
Number of control inputs	4 x PWM
Input frequency	120 – 250 Hz
Control input, PWM voltage	18 – 24 V
Control input, max. signal level LOW	3 V
Control input, min. signal level HIGH	13 V
Control input, max. power draw at 24 V	2.4 mA
Number of output channels	4 (e.g. RGBA)
Output voltage range ②	3 – 43 V
Output voltage at 24 V ①	3 – 19 V (SELV)
Output voltage at 45 V ①	25 – 40 V (SELV)
Output voltage at 48 V ①	28 – 43 V (SELV)
Output frequency	120 – 250 Hz
Output, dimming range	1 – 100 %
Output current	0.35 A / channel
Max. cable length (LED control gear – LED module)	20 m
Ambient temperature ta	-20 ... +45 °C
Max. casing temperature	70 °C
Weight per pc.	0.15 kg

Ordering data

Type	Article number	Weight per pc.
C350-2 4-channel PWM dimmer	**86458693**	0.15 kg

① SELV to be provided by the supply unit, e.g. TALEXconverter K211.
② Depends on supply voltage U_{in} and number of TALEX modules(U_{LED} max. = U_{in} – 5 V).

→

For standards see data sheet

TALEXcontrol C001
Dimmable

Product description

- 3-channel PWM dimmer
- For RGB colour control of LED modules
- For 12 or 24 V DC LED modules
- Suitable for 1...10 V, potentiometer or PWM control
- Ideal for controlling LED objects with relatively high system output (max. 2 A / channel)
- With integrated cable clamp and terminal cover
- Inputs electrically insulated from the supply voltage and output section
- Reverse polarity protection
- Short-circuit and overcurrent protection for output channels
- Automatic shutdown on overheating
- 6-pole screw terminal on the primary side
- 4-pole screw terminal on the secondary side
- Rapid installation of the cable clamp, no tools required

→ For product data sheet go to www.tridonic.com, or available on request

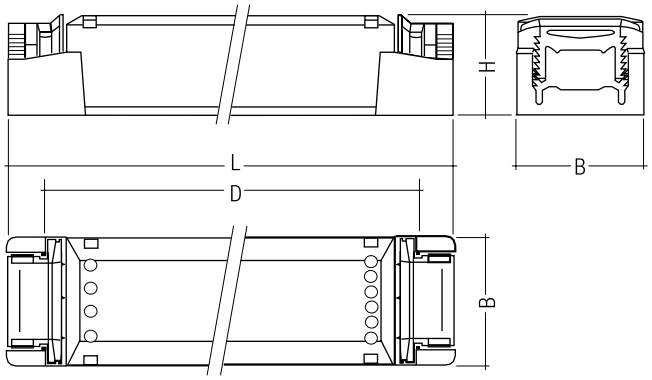

Technical data

Input voltage, DC ①	12 – 24 V (SELV)
Max. supply current	6 A
Number of control inputs	3 x 1...10 V, potentiometer or PWM electrically isolated
Control input analogue	1...10 V
Control input, potentiometer ②	100 kΩ, linear
Control input, PWM voltage	12 – 24 V
Control input, polarity reversal protection	yes, reversible
Number of output channels	3 x PWM (RGB), 350 Hz
Output signal	PWM, 350 Hz
Output voltage range ①	12 – 24 V (SELV)
Output current	max. 2 A / channel
Output, overcurrent protection	yes
Output, short-circuit protection	yes, reversible
Ambient temperature ta	-25 ... 50 °C
Max. casing temperature	70 °C
Weight per pc.	0.2 kg
Dimensions L x W x H	167 x 42 x 31 mm
Hole spacing D	143 – 148 mm

Ordering data

Type	Article number	Packaging, carton	Weight per pc.
C001 PWM dimmer	**86454974**	10 pc(s).	0.2 kg

① SELV to be provided by the supply unit, e.g. TALEXconverter LCU 100 W.
② If several channels are controlled by a potentiometer the resistance value must be divided by the number of channels to be controlled.

→

For standards see data sheet

TALEXcontrol C002
Dimmable

Product description

- 3-channel PWM sequencer
- For RGB colour control of LED modules
- For 12 or 24 V DC LED modules
- For monochrome or RGB modules
- With integrated cable clamp and terminal cover
- Short-circuit protection
- Protection against rapid transients, overvoltage and polarity reversal
- 4-pole screw terminal on the primary side
- 6-pole screw terminal on the secondary side
- Rapid installation of the cable clamp, no tools required

→ For product data sheet go to www.tridonic.com, or available on request

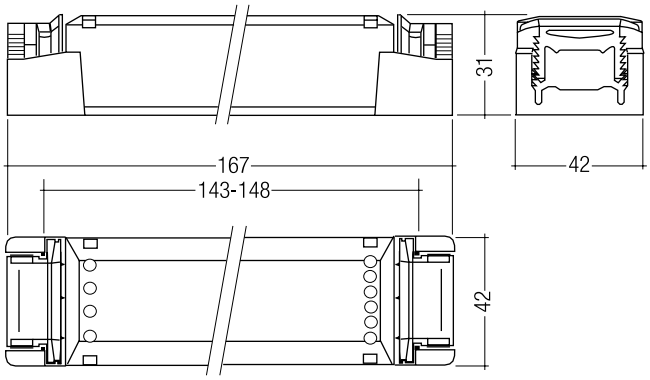

Technical data

Input voltage, DC	12 – 24 V
Max. supply current	6 A
Control input analogue	1...10 V
Control input, potentiometer	100 kΩ, linear
Output + pole	–
Output, - pole red	2 A
Output, - pole green	2 A
Output, - pole blue	2 A
Output voltage range	12 – 24 V
Ambient temperature ta	0 ... +50 °C
Weight per pc.	0.084 kg

Ordering data

Type	Article number	Packaging, carton	Weight per pc.
C002 PWM sequenzer	**86454968**	10 pc(s).	0.084 kg

→

For standards see data sheet

CE RoHS

TALEXcontrol C003 DALI RGB

Dimmable

Product description

- 3-channel DALI dimming controller
- For 24 V LED modules
- With integrated sequencer for standalone operation (factory default: activated)
- Compact dimensions
- Short-circuit protection with automatic restart
- Overtemperature protection
- Screw terminal
- DALI control input
- 3 addressable output channels

→ For product data sheet go to www.tridonic.com, or available on request

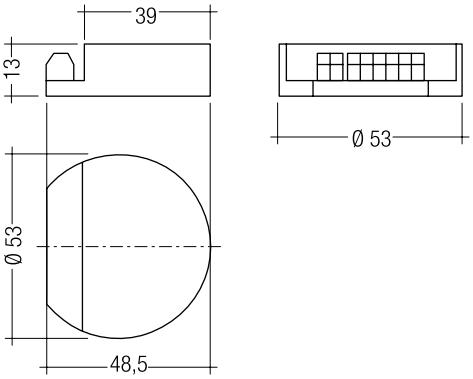

Technical data

Input voltage, DC ①	8 – 24 V (SELV)
Max. supply current	1.8 A
Power consumption	20 mA
Control input, interface, dimming	DALI
Control input, power draw	2 mA
Control input, polarity reversal protection	yes
Number of output channels	3 (RGB)
Output signal	PWM, 125 Hz
Output voltage range ①	8 – 24 V (SELV)
Output, dimming range	0.1 – 100 %
Output current	max. 0.6 A / channel
Output, overcurrent protection	yes
Output, short-circuit protection	yes, reversible
Output, overtemperature protection	yes
Ambient temperature ta	-25 ... +55 °C
Max. casing temperature	65 °C
Weight per pc.	0.02 kg

→

For standards see data sheet

Ordering data

Type	Article number	Packaging, carton	Weight per pc.
C003 DALI RGB Controller	**86457912**	80 pc(s).	0.02 kg

① SELV to be provided by the supply unit, e.g. TALEXconverter LCU 35 W.

RoHS

TALEXcontrol C004
Dimmable

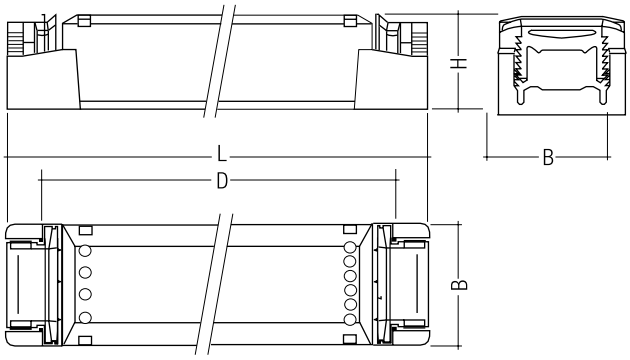

Product description

- 3-channel PWM booster
- For 12 or 24 V DC LED modules
- For monochrome or RGB modules
- Suitable for combining with TALEXcontrol C002, TALEXconverter K210 and K211
- Ideal for controlling LED objects with relatively high system output (max. 2 A / channel)
- With integrated cable clamp and terminal cover
- Inputs electrically insulated from the supply voltage and output section
- Reverse polarity protection
- Short-circuit and overcurrent protection for output channels
- Automatic shutdown on overheating
- 6-pole screw terminal on the primary side
- 4-pole screw terminal on the secondary side
- Rapid installation of the cable clamp, no tools required

→ For product data sheet go to www.tridonic.com, or available on request

Technical data

Input voltage, DC ①	12 – 24 V (SELV)
Max. supply current	6 A
Number of control inputs	3 x PWM electrically isolated
Control input, PWM voltage	12 – 24 V
Control input, power draw	15 mA / channel
Control input, polarity reversal protection	yes, reversible
Number of output channels	3 x PWM (RGB)
Output voltage range ①	12 – 24 V (SELV)
Output current	max. 2 A / channel
Output, overcurrent protection	yes (2.8 A)
Output, short-circuit protection	yes, reversible
Ambient temperature ta	-25 ... +45 °C
Max. casing temperature	70 °C
Weight per pc.	0.1 kg
Dimensions L x W x H	167 x 42 x 31 mm
Hole spacing D	143 – 148 mm

→

For standards see data sheet

Ordering data

Type	Article number	Packaging, carton	Weight per pc.
C004 Booster (PWM)	**24138760**	10 pc(s).	0.1 kg

① SELV to be provided by the supply unit, e.g. TALEXconverter LCU 100 W.

TALEXcontrol C350 dim

Dimmable

Product description

- Constant current converter 350 mA for TALEXmodule EOS
- Dimming range 10 to 100 %
- Dimmable via momentary-action switch or potentiometer (designed for a 100 kΩ potentiometer) ④
- Step circuit
- Suitable for centrally supplied LED installations
- Slim compact design
- No-load and short-circuit protection (on the output side)
- Reverse polarity protection
- Connection: solder points
- Mounting with premounted thermally conductive adhesive tape
- Suitable for mounting on Tridonic profiles
- No overvoltage protection
- SELV

→ For product data sheet go to www.tridonic.com, or available on request

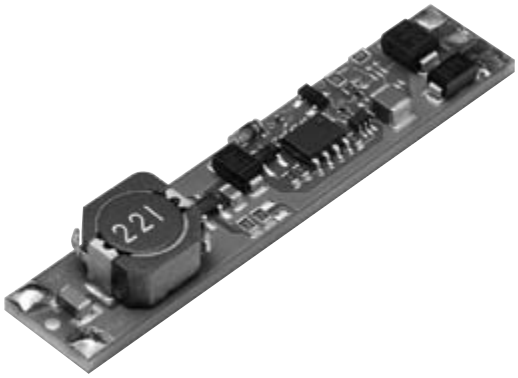

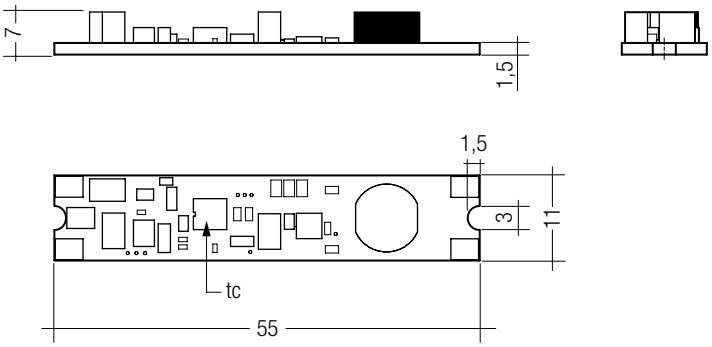

Technical data

Input voltage, DC ①	8 – 48 V
Efficiency ① ②	> 85 %
Output voltage (U_{in} < 30 V) ③	2.5 V until (U_{in} – 3 V)
Output voltage (U_{in} ≥ 30 V) ③	5 V until (U_{in} – 3 V)
Max. power loss	1.6 W
Output current	350 mA ±10 %
Ambient temperature ta	-25 ... +50 °C
Max. casing temperature	85 °C
Weight per pc.	0.004 kg
Dimensions L x W x H	55 x 11 x 7 mm

Ordering data

Type	Article number	Packaging, carton	Weight per pc.
LED C350 12-48VDC 16VA dim	**86458944**	50 pc(s).	0.004 kg

① Output voltage depends on supply voltage and the number of conected TALEX modules (U_{in} – 3 V).
② Efficiency depends on the load of the TALEXcontrol LED C350. Efficiency possible up to 95 %.
③ For more than 24 V a heat sink is required (e. g. Z201-2).
④ In momentary-action switch operation only one TALEXcontrol C350 dim per momentary-action switch is permitted.

→

For standards see data sheet

TALEX(control C700 dim
Dimmable

Product description

- Constant current converter 700 mA for TALEX(module EOS
- Dimming range 10 to 100 %
- Dimmable via momentary-action switch or potentiometer (designed for a 100 kΩ potentiometer) ④
- Step circuit
- Suitable for centrally supplied LED installations
- Slim compact design
- No-load and short-circuit protection (on the output side)
- Reverse polarity protection
- Connection: solder points
- Mounting with premounted thermally conductive adhesive tape
- Suitable for mounting on Tridonic profiles
- No overvoltage protection
- SELV

→ For product data sheet go to www.tridonic.com, or available on request

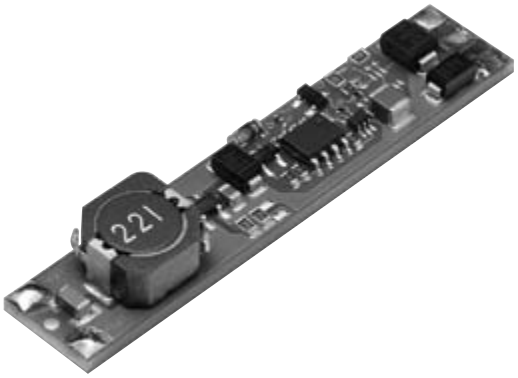

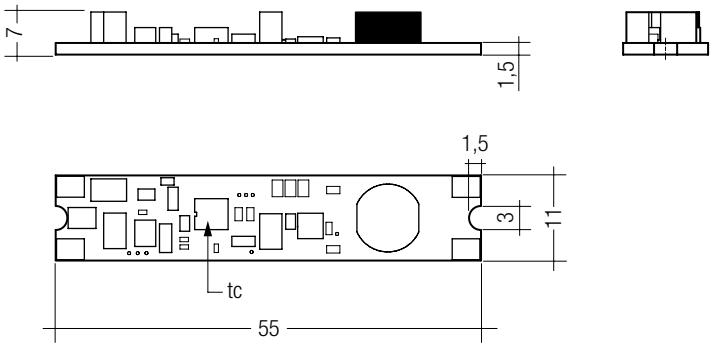

Technical data

Input voltage, DC ①	8 – 48 V
Efficiency ① ②	> 85 %
Output voltage (U_{in} < 30 V) ③	2.5 V until (U_{in} – 3 V)
Output voltage (U_{in} ≥ 30 V) ③	5 V until (U_{in} – 3 V)
Max. power loss	1.6 W
Output current	700 mA ±10 %
Ambient temperature ta	-25 ... +50 °C
Max. casing temperature	85 °C
Weight per pc.	0.004 kg
Dimensions L x W x H	55 x 11 x 7 mm

Ordering data

Type	Article number	Packaging, carton	Weight per pc.
LED C700 12-48VDC 32VA dim	**86458945**	50 pc(s).	0.004 kg

① Output voltage depends on supply voltage and the number of conected TALEX(modules (U_{in} – 3 V).
② Efficiency depends on the load of the TALEX(control LED C700. Efficiency possible up to 95 %.
③ For more than 24 V a heat sink is required (e. g. Z201-2).
④ In momentary-action switch operation only one TALEX(control C700 dim per momentary-action switch is permitted.

→

For standards see data sheet

CE RoHS

TALEX(control C350-2 12 – 24 V DC / 350 mA 8 VA

Fixed output

Product description

- Constant current converter 350 mA for TALEX(module EOS
- Suitable for centrally supplied LED installations
- Compact dimensions
- Simple installation thanks to pre-fitted adhesive tape
- No-load and overtemperature protection
- Connection: solder points
- Suitable for mounting on Tridonic profiles
- Mounting with premounted thermally conductive adhesive tape

→ For product data sheet go to www.tridonic.com, or available on request

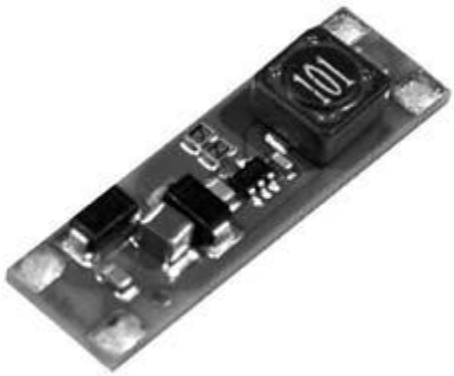

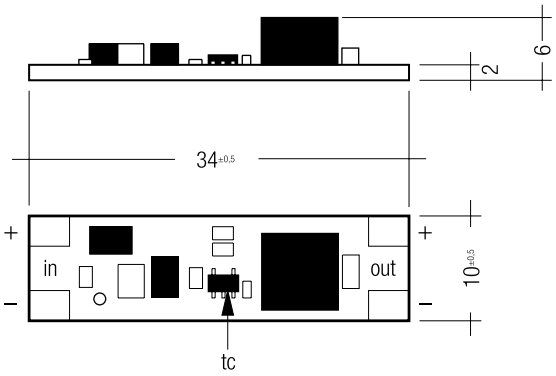

Technical data

Input voltage, DC	12 – 24 V
Max. input voltage DC	29 V
Efficiency	> 85 %
Output voltage ①	max. 22 V (U_{in} – 2 V)
Output power	8 W
Max. power loss	0.65 W
Output current	0.35 A
Max. cable length (LED control gear – LED module)	20 m
Ambient temperature ta	-25 ... +50 °C
Max. casing temperature	80 °C
Weight per pc.	0.004 kg
Dimensions L x W x H	34 x 10 x 6 mm

→

For standards see data sheet

Ordering data

Type	Article number	Packaging, carton	Weight per pc.
C350-2 12-24VDC	**86458453**	50 pc(s).	0.004 kg

① Output voltage depending on supply voltage and the number of connected TALEX(modules (U_{in} – 2 V).

CE RoHS

TALEXcontrol C700 12 – 24 V DC / 700 mA 16 VA

Fixed output

Product description

- Constant current converter 700 mA for TALEXmodule EOS
- Suitable for centrally supplied LED installations
- Slim compact design
- No-load and overtemperature protection
- Connection: solder points
- Premounted thermally conductive adhesive tape
- Suitable for mounting on Tridonic profiles

→ For product data sheet go to www.tridonic.com, or available on request

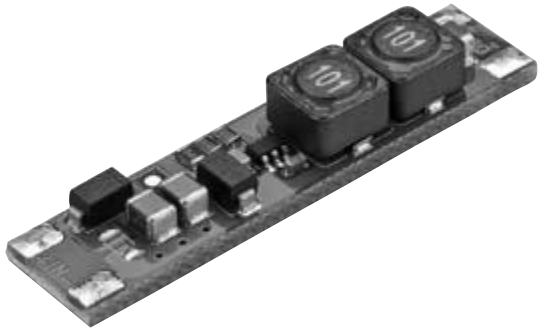

Technical data

Input voltage, DC	12 – 24 V
Max. input voltage DC	29 V
Efficiency	> 85 %
Output voltage ①	max. 22 V (U_{in} – 2 V)
Output power	16 W
Max. power loss	0.65 W
Output current	0.7 A
Max. cable length (LED control gear – LED module)	20 m
Ambient temperature ta	-25 ... +50 °C
Max. casing temperature	80 °C
Weight per pc.	0.005 kg
Dimensions L x W x H	44 x 10 x 6 mm

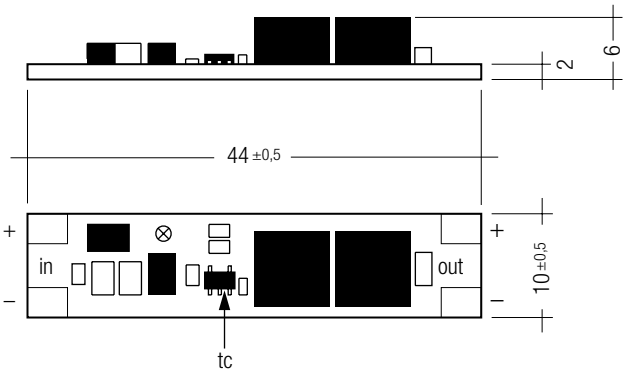

→

For standards see data sheet

Ordering data

Type	Article number	Packaging, carton	Weight per pc.
C700 12-24VDC	**86458513**	50 pc(s).	0.005 kg

① Output voltage depending on supply voltage and the number of connected TALEX modules (U_{in} – 2 V).

IP67 **SELV** RoHS

TALEXcontrol LNU M 12 – 24 V IP67 G1

Signage

Product description

- Constant voltage 3-channel PWM dimmer with adjustable, fully automatic or manual dimming
- For 12 or 24 V DC LED modules
- Integrated light sensor (twilightCONTROL) dims LED systems automatically to minimum necessary LED power according to ambient light situation
- switchDIM (with memory function)
- Individual adjustment of LED brightness to meet statutory requirements
- Protection class II
- switchDIM electrically insulated from input and output
- Reverse polarity protection on the input and output
- Short-circuit and overcurrent protection for output channels
- Automatic shutdown on overheating
- Strain relief connection cable 0.5 m
- Type of protection IP67
- Casing: polycarbonate, transparent (UV resistant)
- Nominal life of 50,000 h (at ta 55 °C with a failure rate ≤ 0.1 % per 1,000 h)
- Synchronisation with up to 19 TALEXcontrol LNU S possible
- 5-year guarantee

→ For product data sheet go to www.tridonic.com, or available on request

For standards see data sheet

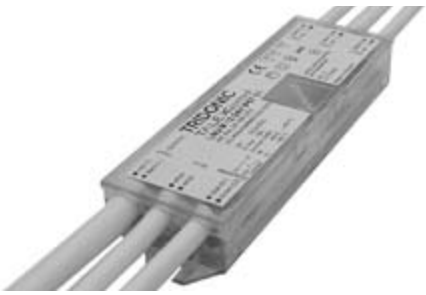

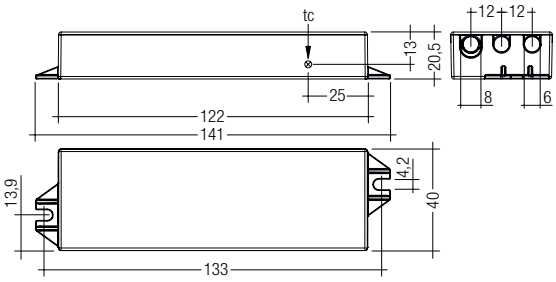

Technical data

DC voltage input	12 / 24 V
Max. DC voltage range input	10 – 28 V
Max. supply current	15 A
Input reverse polarity protection	yes, reversible
AC voltage range switchDIM	90 – 277 V ± 10 %
Mains frequency switchDIM	0 / 50 / 60 Hz
Sync. short-circuit protection	yes, reversible
Sync. voltage output	9 V
Sync. voltage input	5 – 12 V
Sync. frequency	ca. 8 Hz (125 ms)
Number of output channels	3 x PWM
DC voltage output	12 / 24 V
Output current	max. 5 A / channel
Output, overcurrent protection	yes (6 A, -10 / +15 %)
Output, short-circuit protection	yes, reversible
PWM frequency	495 Hz
Voltage drop	max. 150 mV
Max. power loss ①	< 2.5 W
Stand-by losses ②	< 100 mW
Time to light	< 0.1 s
Turn off time	< 0.1 s
Hold on time	< 100 ms
Ambient temperature ta	-40 ... +60 °C
Storage temperature ts	-40 ... +85 °C
Max. casing temperature tc	70 °C
Dimensions L x W x H	141 x 40 x 20.5 mm
Hole spacing D	133 mm
Dimming range Twilight control ③	0 – 95 %
Dimming range switchDIM	0 / 0.1 – 100 %

Ordering data

Type	Article number	Packaging	Packaging, carton	Weight per pc.
LNU M 12 – 24 V IP67 G1	**28000018**	1 pc(s).	10 pc(s).	0.355 kg

① At full load and 12 V: 3 x 5 A load at the output.

② No LNU S connected, no switchDIM activation. The power loss increases for every LNU S connected by around 30 mW at 12 V and around 50 mW at 24 V.

③ The maximum possible dimming value in twilightCONTROL depends on the LEDs used, the particular application and the sensitivity level.

IP67 SELV RoHS

TALEXcontrol LNU S 12 – 24 V IP67 G1

Signage

Product description

- Constant voltage 3-channel PWM dimmer extension device for TALEXcontrol LNU M PWM dimmer
- For 12 or 24 V DC LED modules
- Sync. electrically insulated from the supply voltage and output
- Protection class II
- Reverse polarity protection
- Short-circuit and overcurrent protection for output channels
- Automatic shutdown on overheating
- Strain relief connection cable 0.5 m
- Type of protection IP67
- Casing: polycarbonate, transparent (UV resistant)
- Nominal life of 50,000 h (at ta 55 °C with a failure rate ≤ 0.1 % per 1,000 h)
- Synchronisation with TALEXcontrol LNU M required
- 5-year guarantee

→ For product data sheet go to www.tridonic.com, or available on request

→

For standards see data sheet

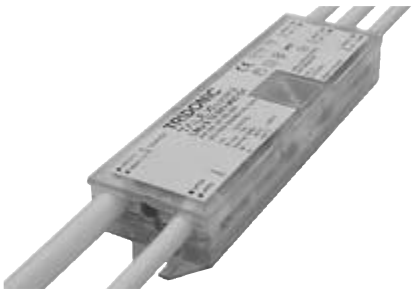

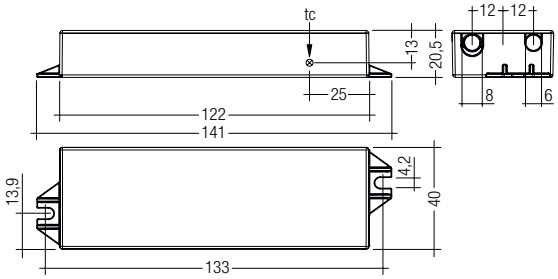

Technical data

DC voltage input	12 / 24 V
Max. DC voltage range input	10 – 28 V
Max. supply current	15 A
Input reverse polarity protection	yes, reversible
Sync. short-circuit protection	yes, reversible
Sync. voltage output	9 V
Sync. voltage input	5 – 12 V
Sync. frequency	ca. 8 Hz (125 ms)
Number of output channels	3 PWM
DC voltage range output	12 – 24 V
Output current	max. 5 A / channel
Output, overcurrent protection	yes (6 A)
Output, short-circuit protection	yes, reversible
PWM frequency	495 Hz
Voltage drop	max. 150 mV
Max. power loss ①	< 2.5 W
Stand-by losses	< 100 mW
Time to light	< 0.1 s
Turn off time	< 0.1 s
Hold on time	< 100 ms
Ambient temperature ta	-40 ... +60 °C
Storage temperature ts	-40 ... +85 °C
Max. casing temperature tc	70 °C
Dimensions L x W x H	141 x 40 x 20.5 mm
Hole spacing D	133 mm
Dimming range Twilight control ②	0 – 95 %
Dimming range switchDIM ②	0 / 0.1 – 100 %

Ordering data

Type	Article number	Packaging	Packaging, carton	Weight per pc.
LNU S 12-24 V IP67 G1	**28000050**	1 pc(s).	10 pc(s).	0.357 kg

① At full load and 12 V: 3 x 5 A load at the output.

② The extension devices will be controlled from master device LNU M via the synchronisation cable.

CE RoHS

TALEXcontrol LNU I IP20 G1

Signage

Product description

- Service device for programming of TALEXcontrol LNU M and LNU S
- USB connector
- Cable length 500 mm
- Terminals for connecting the sync line of the TALEXcontrol LNU M and LNU S
- Casing: polycarbonate, transparent (UV resistant)
- LNU configurator
- 5-year guarantee

Functions

- Change in the ambient brightness response, free programming of dimming curve
- Individual dimming settings
- Readout of the device settings og LNU M
- Predefinition of switchDIM settings and the switchDIM memory level
- Update of firmware LNU M and LNU S
- Update to customer specific firmware

→ For product data sheet go to www.tridonic.com, or available on request

For standards see data sheet

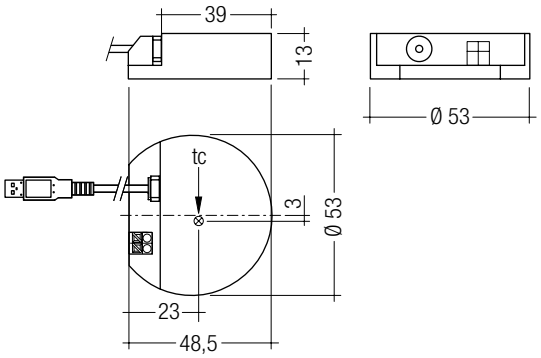

Technical data

Current consumption USB	50 mA
Voltage USB	5 V
Sync. short-circuit protection	yes, reversible
Sync. reverse polarity protection	yes, reversible
Ambient temperature ta	0 ... +50 °C
Storage temperature ts	-30 ... +85 °C
Max. casing temperature tc	50 °C
Dimensions L x W x H	48.5 x 53 x 13 mm

Ordering data

Type	Article number	Packaging	Packaging, carton	Weight per pc.
LNU I IP20 G1	**28000163**	1 pc(s).	10 pc(s).	0.042 kg

Product overview LED compact

STARK DLE
Luminaire type: Downlights

Available in PREMIUM and CLASSIC versions
- High colour rendering quality and colour stability, CRI 80
- Luminous flux values of 1,100; 2,000 and 3,000 lm
- Tunable white with CRI 90 from 2,700 to 6,500 K for the PREMIUM module
- Low colour temperature tolerances

STARK SLE
Luminaire type: Spotlights, down-lights, recessed floor & wallmounted luminaires, street lanterns

The best light whatever the need
- High module and system efficiencies
- Luminous flux range from 610 to 6,300 lm
- Classic CRI 80, Select CRI 90, Premium CRI 90 with tunable white from 2,700 to 6,500 K
- Longer life L90 50,000 h and greater light output
- Also available for special applications with special spectra, e.g.: SLE FOOD for merchandise presentation, SLE ART with Full Spectrum Technology and CRI 98
- High-power LED in Chip-On-Board technology (COB)

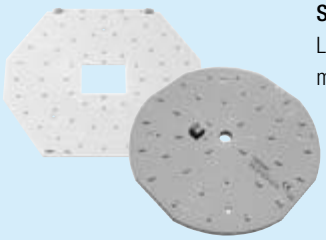

STARK CLE
Luminaire type: Recessed floor & wall-mounted luminaires

Replacement for circular and TC-DD fluorescent lamps
- Uniform illumination with no shadow effects
- Luminous flux range from 1,300 to 3,900 lm
- With integrated emergency lighting function and SWITCH sensor (SO version)
- Self-cooling (no additional heat sink required)
- High colour rendering index CRI > 80

STARK FLE
Luminaire type: Spotlights, high bay luminaires, hall spotlights

For use in spotlights
- High module efficiency and colour consistency
- Flexible operating mode
- Luminous flux range from 10,000 to 23,000 lm
- Uniform emission thanks to Dam&Fill technology

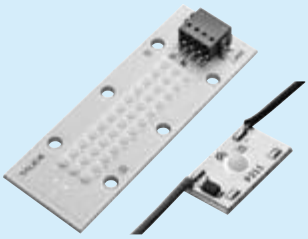

EOS
Luminaire type: Spotlights, down-lights, recessed floor & wallmounted luminaires, street lanterns

LED modules for many different applications
- COB individual light point modules for flexible use in general illumination, e.g. emergency lighting, designer lighting or effect lighting
- High-flux LEDs in Chip-On-Board (COB) technology offer high efficiency and maximum luminance
- Lenses available as accessories

EMERGENCY
Luminaire type: Emergency lighting

LED modules for emergency lighting applications
- LED modules for escape route emergency lighting, anti-panic emergency lighting or escape route signs
- High-power LED in Chip-On-Board technology (COB)
- Compatible with EM powerLED

Product overview LED linear /area

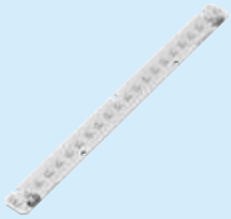

STARK LLE
Luminaire type: Linear luminaires (in-built, remote, pendant), recessed floor & wallmounted luminaires, free-standing luminaires

Ideal for linear and area luminaires
- LED system solution with excellent system efficiency
- Dimensions 280 / 560 x 24 mm
- Luminous flux values of 650; 1,300 and 2,000 lm
- Perfectly uniform light even if up to 11 LED modules are connected to an LED converter
- High colour rendering index CRI > 80, 3,000 and 4,000 K
- Narrow luminous flux tolerances

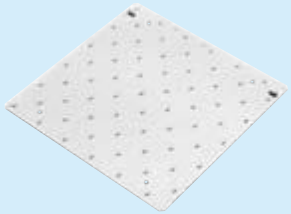

STARK QLE
Luminaire type: Wide-area luminaires (in-built, remote, pendant), recessed floor & wallmounted luminaires, free-standing luminaires

Ideal for linear and area luminaires
- LED system solution with excellent system efficiency
- Dimensions 250 x 250 / 270 x 270 mm
- Luminous flux 1,300 lm
- Perfectly uniform light even if several LED modules are arranged one after the other
- High colour rendering index CRI > 80, 3,000 and 4,000 K
- Self-cooling (no additional heat sink required)

STARK INDI
Luminaire type: free-standing luminaires

Extremely slim LED module with uniform illumination
- Indirect/direct distribution of light 20/80 %
- Perfectly uniform light even if several LED modules are arranged one after the other
- Luminous flux range from 2,400 to 2,750 lm
- High colour rendering index CRI > 80
- Self-cooling (no additional heat sink required)

Product overview OLED

LUREON REP
Luminaire type: Wall luminaires, free-standing luminaires, widearea luminaires (in-built, remote, pendant), design luminaires

Efficient OLEDs for professional lighting applications
Maximum performance combined with efficient and unique light:
LUREON REP provides an entry point for organic light in high-performance lighting applications.

At a glance:
- Efficient OLED modules with up to 50 lm/W
- Excellent colour rendering (CRI > 80)
- Dimmable neutral white light in 4,000 K
- Uniform glare-free area light
- High specific light emission of up to 12,000 lm/m^2
- Extremely low-profile design (< 3 mm)
- White diffused surface for a uniform and neutral appearance
- Small colour angle shift (x, y ≤ 0.005)
- Small colour tolerance (MacAdam 4)
- Maximum exploitation of the illuminated surface

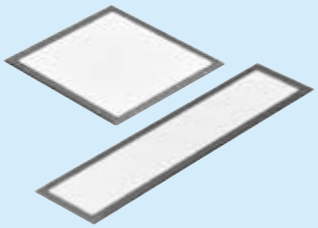

LUREON REM
Luminaire type: Wall luminaires, free-standing luminaires, widearea luminaires (in-built, remote, pendant), design luminaires

Low profile for design freedom and ease of handling
The dimmable modules in the LUREON REM product series are characterised by an extremely low profile. The benefits of OLEDs are apparent in stylish designer luminaires or unobtrusive area light sources.

At a glance:
- Different lighting formats with a simple connection for flexible module arrangements
- Excellent colour rendering (CRI > 80)
- Dimmable warm white light in 3,000 K
- Uniform glare-free area light
- High system efficacy of 40 lm/W
- High specific light emission of 9,000 lm/m^2
- Extremely low-profile design (< 2.5 mm)
- White diffused surface for a uniform and neutral appearance
- Small colour angle shift (x, y ≤ 0.005)
- Small colour tolerance (MacAdam 4)

TRIDONIC Setbuilder

With three steps to the appropiate LED system

The Setbuilder service supports you to find suitable control gears for TRIDONIC LED modules. You can use the web tool via the link **www.tridonic.com/setbuilder**. Here TRIDONIC offers an offline version for downloading too. Additionally the Setbuilder is available within the website **www.tridonic.com**.

Use the following website starting points to run the Setbuilder:

- Setbuilder link on the front page in the “Recommended links” box
- Setbuilder button within the navigation in the area “LED / OLED Light Engine”
- Setbuilder tab on each LED module product page

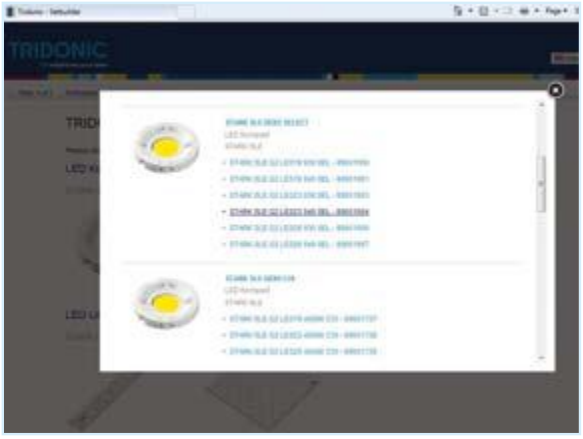

Follow the instructions for the appropriate system:

1 Select a module from the TRIDONIC LED portfolio.

2 Determine the requirements of the control gear. Select the appropriate device from the table.

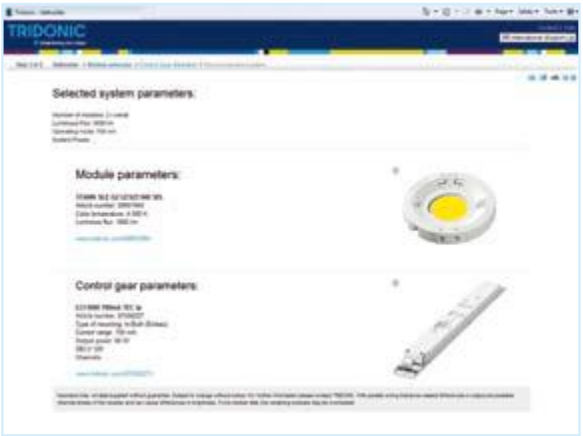

3 The “Recommended solution” screen shows your system and components parameters. Use the mail or print function or jump back to step 2 for a change of the set conditions to adjust the result according to your wishes.

TALEXengine STARK DLE PREMIUM system
STARK DLE

Product description

- Tunable white system with adjustable colour temperature along the planck's curve from 2.700 to 6.500 K
- NEW DALI DEVICE Type 8 for tunable white
- Noise-free precise control via switchDIM, DALI or DSI

Necessary system components:

- TALEXmodule STARK DLE PREMIUM
- TALEXconverter LCAU 2x20 W one4all
- 5-year guarantee

→ For product data sheet go to www.tridonic.com, or available on request

TALEXengine STARK DLE PREMIUM system

TALEXmodule STARK DLE-PREMIUM

In-built LED control gear

Remote LED control gear

Ordering data

Type	Article number	System components
STARK DLE 800-927-965-PRE	89601166	Module with integrated controls
STARK DLE 1800-927-965-PRE	89601165	Module with integrated controls
LCAU 2x020/0048 L010 one4all	86459414	In-built LED control gear
LCAU 2x020/0048 L020 one4all	86459108	Remote LED control gear

TALEXmodule STARK DLE PREMIUM

DLE module system component

Product description

- Tunable white – LED system with adjustable colour temperature along the planck's curve ①
- High efficiency
- High colour rendering index CRI > 90
- Low colour temperature tolerances (MacAdam 3)
- Low tolerances for luminous flux
- High-power LED in chip-on-board technology (COB)
- Excellent thermal management ②
- Downlights
- Constant colour over the dimming range from 15 to 100 %
- 5-year guarantee

→ For product data sheet go to www.tridonic.com, or available on request

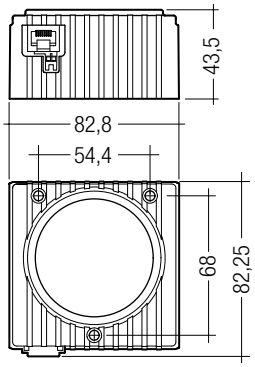

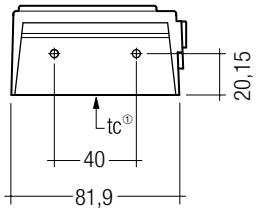

① The tc-point is situated in centre of the bottom side

Technical data

Beam angle	80°
Ambient temperature ta ②	-25 ... +55 °C
Typ. tc point	65 °C
Risk group (EN 62471:2008)	0

→

For standards see data sheet

For colour temperatures and tolerances see data sheet

Ordering data

Type	Article number	Colour temperature ③	Packaging, carton	Weight per pc.
STARK DLE 800-927-965-PRE	**89601166**	2,700 – 6,500 K	10 pc(s).	0.29 kg
STARK DLE 1800-927-965-PRE	**89601165**	2,700 – 6,500 K	10 pc(s).	0.29 kg

Specific technical data

Type	Photometric code	Luminous flux ③ ④	Power consumption system ⑤	Luminous efficacy system	Colour rendering index CRI, 2,700 – 6,500 K ③	Energy classification
STARK DLE 800-927-965-PRE	927/3x9 to 965/3x9	800 lm	14.5 W	55 lm/W	> 90	B
STARK DLE 1800-927-965-PRE	927/3x9 to 965/3x9	1,800 lm	27.4 W	66 lm/W	> 90	A

① Tunable white is based on the PI-LED technology. PI-LED is a trademark of Lumitech.
② If the max. temperature limits are exceeded, the life of the system will be greatly reduced or the system may be damaged. The temperature of the TALEXmodule at the tc-point is to be measured in the thermally stable state with a temperature sensor or a temperature sensitive sticker according to EN 60598-1. For the precise position of the tc point see the above diagram.
③ Colour temperature and colour rendering index CRI according to CIE 1931.
④ Tolerance range for optical data: ±10 %.
⑤ Tolerance range for electrical data: ±10 %.

IP20 SELV RoHS

TALEXconverter LCAU 2x20 W one4all

LED control gear module system component

Product description

- LED control gear for PREMIUM modules
- Output power: 2 x 20 W or 1 x 40 W
- Connecting cable, wire cross-section 0.5 – 2.5 mm²
- Power input on standby < 0.5 W
- Strain relief by remote LED control gear
- RJ45 connector for plug & play

Properties

- switchDIM (with memory function)
- colourSWITCH 2,700 – 6,500 K (with memory function) ①
- NEW DALI DEVICE Type 8 for tunable white
- Noise-free precise control via DALI, DSI signal or switchDIM
- Powerless switching via a digital interface (no need for switching via mains)
- Intelligent Temperature Guard (overtemperature protection)
- Short-circuit shutdown feature with automatic restart (every 7 s)
- No-load shutdown feature with automatic restart (every 7 s)
- Overload protection by reduction of performance ②
- SELV
- Plastic casing black
- Type of protection IP20 (remote LED control gear)

→ For product data sheet go to www.tridonic.com, or available on request

Technical data

Rated supply voltage	220 – 240 V
Input voltage, AC	198 – 264 V
Input voltage, DC ①	170 – 264 V
Rated current (at 230 V, 50 Hz)	0.21 A
Mains frequency	0 / 50 / 60 Hz
Efficiency	90 %
λ at 230 V, 50 Hz, full load	0.95
Control input ① ③	DSI, DALI, switchDIM, colourSWITCH
Stand-by power ④	< 0.5 W
Output voltage	49 V ±2 V
Output power	2 x 25 W / 1 x 40 W
Dimming range	15 – 100 %
Set up time (at 230 V, 50 Hz)	< 1 s
Switchover time AC/DC and DC/AC	< 1 s
Leakage current (FE)	0.25 mA
ta operating (at lifetime 50,000 h)	-20 ... +45 °C
Max. casing temperature (at lifetime 50,000 h)	65 °C

→

For standards see data sheet

In-built LED control gear

Remote LED control gear

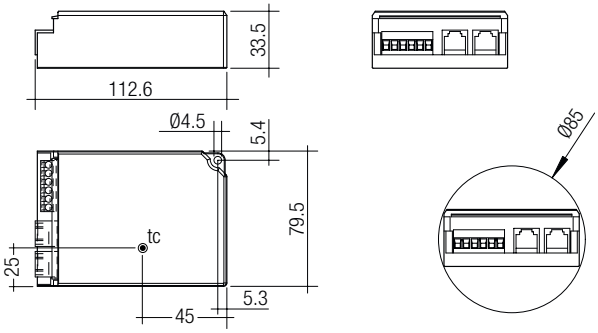

In-built LED control gear

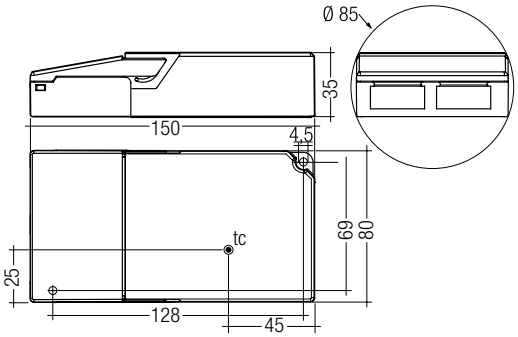

Remote LED control gear

Ordering data

Type	Article number	Packaging, carton	Packaging, pallet	Weight per pc.
LCAU 2x020/0048 L010 one4all	**86459414**	10 pc(s).	560 pc(s).	0.19 kg
LCAU 2x020/0048 L020 one4all	**86459108**	10 pc(s).	560 pc(s).	0.21 kg

① In DC operation the last set colour is used.
② If the overload is too high the LED control gear switches off and tries to restart every 7 s.
③ No colourSWITCH at DC operation.
④ No fan operation on standby.

ACCES-
SORIES

TALEX‹accessory CONNECT – RJ45 U

Product description

- Connection cable 1 or 2 m for connecting TALEX‹module STARK and TALEX‹converter LCAU
- RJ45 unshielded

Ordering data

Type	Article number	Length L	Packaging	Weight per pc.
RJ45/RJ45 U 1.0m	**24166480**	1 m	1 pc(s).	0.040 kg
RJ45/RJ45 U 2.0m	**24166481**	2 m	1 pc(s).	0.079 kg

NEW

TALEX(module STARK DLE GEN2 CLASSIC
STARK DLE

Product description

- For downlights
- High efficiency up to 162 lm/W for the LED module
- High system efficiency up to 139 lm/W at tp = 65 °C
- BLO operation mode: Best LED operation for optimum operation and constant luminous flux at all colour temperatures in combination with Tridonic LED control gear of TOP and ECO series
- High colour consistency (MacAdam 3)
- Fixing holes for M3 screws
- Built-in LED module
- Cooling required
- Flexible operating mode

→ For product data sheet go to www.tridonic.com, or available on request

Technical data

Beam characteristic	140°
Ambient temperature ta	-25 ... +55 °C
tp_rated temperature ①	65 °C
Max. tc point temperature ①	up to 85 °C
Risk group (EN 62471:2008)	1
Type of protection	IP00

→

For standards see data sheet

For colour temperatures and tolerances see data sheet

With housing – Dimensions in mm

PURE (without housing) – Dimensions in mm

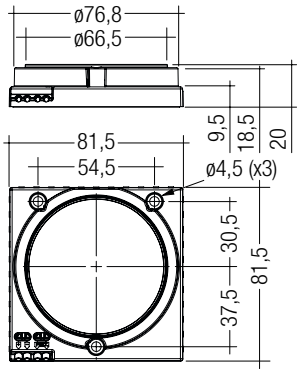

With housing – Dimensions in mm

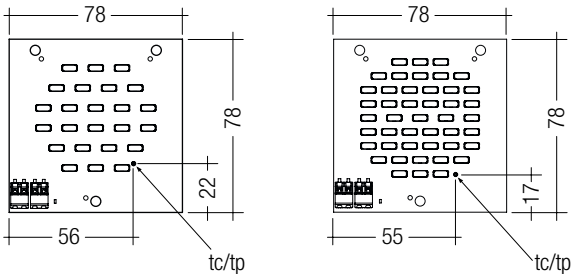

PURE (without housing) – Dimensions in mm

Ordering data

Type	Article number	Colour temperature	Housing	Packaging, carton	Weight per pc.
STARK-DLE-PURE-G2-LES65-2000-830-CLA	28000264	3,000 K	no	1 pc(s).	0.030 kg
STARK-DLE-PURE-G2-LES65-2000-840-CLA	28000265	4,000 K	no	1 pc(s).	0.030 kg
STARK-DLE-PURE-G2-LES65-3000-830-CLA	28000266	3,000 K	no	1 pc(s).	0.030 kg
STARK-DLE-PURE-G2-LES65-3000-840-CLA	28000267	4,000 K	no	1 pc(s).	0.030 kg
STARK-DLE-G2-LES65-2000-830-CLA	28000268	3,000 K	yes	10 pc(s).	0.065 kg
STARK-DLE-G2-LES65-2000-840-CLA	28000269	4,000 K	yes	10 pc(s).	0.065 kg
STARK-DLE-G2-LES65-3000-830-CLA	28000270	3,000 K	yes	10 pc(s).	0.065 kg
STARK-DLE-G2-LES65-3000-840-CLA	28000271	4,000 K	yes	10 pc(s).	0.065 kg

Specific technical data

Type ②	Photo-metric code	Forward current ③ ④ ⑤	Luminous flux at tp = 25 °C ⑥	Luminous flux at tp = 65 °C ⑥	Power con-sumption module ⑦	Min. forward voltage module at tp = 65 °C	Max. forward voltage module at tp = 25 °C	Luminous efficacy module at tp = 25 °C	Luminous efficacy module at tp = 65 °C	Luminous efficacy system at tp = 65 °C ⑧	Colour rendering index CRI	Energy classifi-cation
STARK-DLE-PURE-G2-LES65-2000 – Module without housing – Operating mode HE at 350 mA												
STARK-DLE-PURE-G2-LES65-2000-830-CLA	830/3x9	350 mA	1,230 lm	1,180 lm	8.1 W	23.3 V	23.7 V	152 lm/W	146 lm/W	131 lm/W	80	A++
STARK-DLE-PURE-G2-LES65-2000-840-CLA	840/3x9	350 mA	1,300 lm	1,190 lm	8.1 W	23.3 V	23.7 V	160 lm/W	147 lm/W	132 lm/W	80	A++
STARK-DLE-PURE-G2-LES65-2000 – Module without housing – Operating mode BLO and HO												
STARK-DLE-PURE-G2-LES65-2000-830-CLA	830/3x9	700 mA	2,310 lm	2,200 lm	17.3 W	24.3 V	24.7 V	134 lm/W	127 lm/W	114 lm/W	80	A+
STARK-DLE-PURE-G2-LES65-2000-840-CLA	840/3x9	700 mA	2,440 lm	2,330 lm	17.3 W	24.3 V	24.7 V	141 lm/W	135 lm/W	121 lm/W	80	A+
STARK-DLE-PURE-G2-LES65-3000 – Module without housing – Operating mode HE at 350 mA												
STARK-DLE-PURE-G2-LES65-3000-830-CLA	830/3x9	350 mA	2,290 lm	2,190 lm	15.1 W	43.7 V	44.5 V	152 lm/W	145 lm/W	131 lm/W	80	A++
STARK-DLE-PURE-G2-LES65-3000-840-CLA	840/3x9	350 mA	2,440 lm	2,330 lm	15.1 W	43.7 V	44.5 V	162 lm/W	154 lm/W	139 lm/W	80	A++
STARK-DLE-PURE-G2-LES65-3000 – Module without housing – Operating mode BLO												
STARK-DLE-PURE-G2-LES65-3000-830-CLA	830/3x9	–	3,430 lm	3,270 lm	25.0 W	44.7 V	45.4 V	137 lm/W	131 lm/W	118 lm/W	80	A+
STARK-DLE-PURE-G2-LES65-3000-840-CLA	840/3x9	–	3,650 lm	3,480 lm	25.0 W	44.7 V	45.4 V	146 lm/W	139 lm/W	125 lm/W	80	A++
STARK-DLE-PURE-G2-LES65-3000 – Module without housing – Operating mode HO at 700 mA												
STARK-DLE-PURE-G2-LES65-3000-830-CLA	830/3x9	700 mA	4,290 lm	4,090 lm	32.4 W	45.6 V	46.3 V	132 lm/W	126 lm/W	114 lm/W	80	A+
STARK-DLE-PURE-G2-LES65-3000-840-CLA	840/3x9	700 mA	4,650 lm	4,360 lm	32.4 W	45.6 V	46.3 V	144 lm/W	135 lm/W	121 lm/W	80	A+
STARK-DLE-G2-LES65-2000 – Module with housing – Operating mode HE at 350 mA												
STARK-DLE-G2-LES65-2000-830-CLA	830/3x9	350 mA	1,110 lm	1,060 lm	8.1 W	23.3 V	23.7 V	137 lm/W	131 lm/W	118 lm/W	80	A+
STARK-DLE-G2-LES65-2000-840-CLA	840/3x9	350 mA	1,170 lm	1,200 lm	8.1 W	23.3 V	23.7 V	144 lm/W	148 lm/W	124 lm/W	80	A++
STARK-DLE-G2-LES65-2000 – Module with housing – Operating mode BLO and HO												
STARK-DLE-G2-LES65-2000-830-CLA	830/3x9	700 mA	2,080 lm	2,000 lm	17.3 W	24.3 V	24.7 V	120 lm/W	116 lm/W	104 lm/W	80	A+
STARK-DLE-G2-LES65-2000-840-CLA	840/3x9	700 mA	2,190 lm	2,000 lm	17.3 W	24.3 V	24.7 V	127 lm/W	116 lm/W	104 lm/W	80	A+
STARK-DLE-G2-LES65-3000 – Module with housing – Operating mode HE at 350 mA												
STARK-DLE-G2-LES65-3000-830-CLA	830/3x9	350 mA	2,060 lm	1,970 lm	15.1 W	43.7 V	44.5 V	136 lm/W	130 lm/W	117 lm/W	80	A+
STARK-DLE-G2-LES65-3000-840-CLA	840/3x9	350 mA	2,190 lm	2,090 lm	15.1 W	43.7 V	44.5 V	145 lm/W	138 lm/W	125 lm/W	80	A++
STARK-DLE-G2-LES65-3000 – Module with housing – Operating mode BLO												
STARK-DLE-G2-LES65-3000-830-CLA	830/3x9	–	3,090 lm	3,000 lm	25.0 W	44.7 V	45.4 V	124 lm/W	120 lm/W	108 lm/W	80	A+
STARK-DLE-G2-LES65-3000-840-CLA	840/3x9	–	3,280 lm	3,000 lm	25.0 W	44.7 V	45.4 V	131 lm/W	120 lm/W	108 lm/W	80	A++

① If the max. temperature limits are exceeded, the life of the module will be greatly reduced or the module may be damaged. The temperature of the TALEX(module at the tp point is to be measured in the thermally stable state with a temperature sensor or a temperature sensitive sticker according to EN 60598-1. For the precise position of the tp point see the above diagram.
② HE ... high efficiency, BLO ... best lamp operation, HO ... high output.
③ Exceeding the max. operating current leads to an overload on the TALEX(module. This may in turn result in a significant reduction in lifetime or even destruction of the TALEX(module.
④ Max. permissible surge current: 1.5 A, duration max. 10 µs.
⑤ Max. permissible repetitive peak current for DLE-G2-LES65-CLA is 840 mA.
⑥ Tolerance range for optical data: ±10 %.
⑦ All values at tp = 65 °C.
⑧ Assumed efficiency for the LED control gear is 0.9.

TALEXengine STARK SLE PREMIUM system
STARK SLE

Product description

- Tunable white system with adjustable colour temperature along the planck's curve from 2.700 to 6.500 K
- NEW DALI DEVICE Type 8 for tunable white
- Noise-free precise control via switchDIM, DALI, DSI or Colour Control Interface for local operation

Necessary system components:

- TALEXmodule STARK SLE PREMIUM
- TALEXconverter LCAU 2x20 W one4all
- 5-year guarantee

→ For product data sheet go to www.tridonic.com, or available on request

TALEXengine STARK SLE PREMIUM system

TALEXmodule STARK SLE-PRE-KIT

TALEXmodule STARK SLE-PRE-W/OH-KIT

In-built LED control gear

Remote LED control gear

Ordering data

Type	Article number	System components
STARK SLE 1400-927-965-PRE-KIT	89601740	LMAI + SLE1400 with housing
STARK SLE 1400-927-965-PRE-W/O H-KIT	89601741	LMAI + SLE1400 without housing
STARK SLE 2000-927-965-PRE-KIT	89601742	LMAI + SLE2000 with housing
STARK SLE 2000-927-965-PRE-W/O H-KIT	89601743	LMAI + SLE2000 without housing
LCAU 2x020/0048 L010 one4all	86459414	In-built LED control gear
LCAU 2x020/0048 L020 one4all	86459108	Remote LED control gear

STARK SLE PREMIUM KIT – part 1

SLE module system component

Product description

- Tunable white – LED system with adjustable colour temperature along the planck's curve from 2,700 to 6,500 K ①
- For spotlights and downlights
- Built-in LED module
- Diameter: 50 mm
- High efficiency
- High colour rendering index CRI > 90
- Low colour temperature tolerances (MacAdam 3)
- Low tolerances for luminous flux
- Plug & play plug connection
- Excellent thermal management by COB technology ②
- Dimming range 15 to 100 %
- Constant luminous flux about colour temperature

→ For product data sheet go to www.tridonic.com, or available on request

Technical data

Beam angle	140°
Ambient temperature ta ②	-25 ... +55 °C
tp point temperature	65 °C
Max. tc point temperature	65 °C
Risk group (EN 62471:2008)	0

→

For standards see data sheet

For colour temperatures and tolerances see data sheet

With housing

Without housing

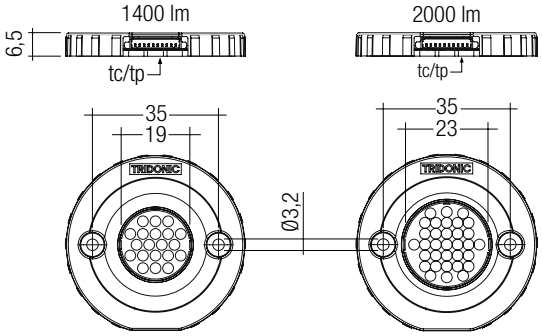

With housing – Dimensions in mm

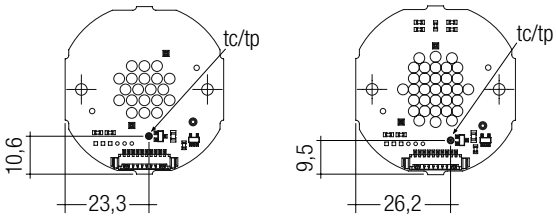

Without housing – Dimensions in mm

Specific technical data

Type	Photometric code	Luminous flux ③ ④	Power consumption system ⑤ ⑥	Luminous efficacy system	Colour rendering index CRI, 2,700 – 6,500 K ④	Energy classification
STARK SLE 1400 PRE	927/3x9 to 965/3x9	1,350 lm	22.2 W	61 lm/W	> 90	B
STARK SLE 2000 PRE	927/3x9 to 965/3x9	2,050 lm	31.7 W	65 lm/W	> 90	A

① Tunable white is based on the PI-LED technology. PI-LED is a trademark of Lumitech.
② If the max. temperature limits are exceeded, the life of the system will be greatly reduced or the system may be damaged. The temperature of the TALEX module at the tc-point is to be measured in the thermally stable state with a temperature sensor or a temperature sensitive sticker according to EN 60598-1. For the precise position of the tc point see the above diagram.
③ Tolerance range for optical data: ±10 %.
④ Colour temperature and CRI according to CIE 1931.
⑤ Tolerance range for electrical data: ±10 %.
⑥ The stated power consumption refer to the system which consists of: TALEX converter LCAU + TALEX module STARK SLE PRE-(W/OH)-KIT.

IP20 RoHS

STARK SLE PREMIUM KIT – part 2

TALEXconverter LMAI system component

Product description

- 500 mA PWM output signal
- Short-circuit protection with automatic restart
- No-load detection with automatic restart
- Intelligent temperature management for LED and LMAI (protection against thermal damage)
- Connecting cable, wire cross-section 0.75 – 1.5 mm²
- Power input on standby 0 W
- Output power max. 44 W
- Strain relief for snap in (only for LMAI with strain-relief set)

LMAI without strain relief set

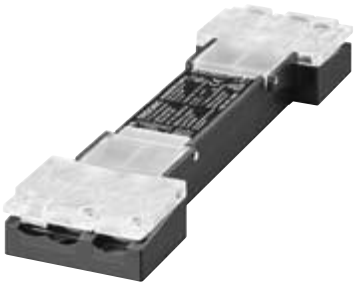

LMAI with strain relief set

Properties

- Use only with LED control gear and LED module possible
- Dimming range 15 to 100 %
- Dimming curve adapted to the sensitivity of the eye
- Max. acceptable cable lenght between LMAI and module 500 mm
- SELV
- Type of protection IP20 (for LMAI with strain-relief set)

→ For product data sheet go to www.tridonic.com, or available on request

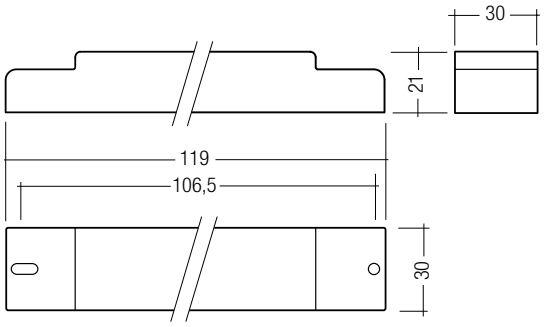

LMAI without strain relief set

Technical data

Rated supply voltage DC	48 V
Input voltage, DC	47 – 51 V
Rated current (at 48 V 0 Hz)	0.9 A
Max. input power with fan	45.5 W
Stand-by power	0 W
Output voltage range	14 – 44 V
Output current tolerance	± 7 %
Output current	500 mA
Output power	44 W
Dimming range	15 – 100 %
PWM frequency	312 Hz
Voltage FAN DC	12 V
Max. operating current FAN	100 mA
Max. switch-on current FAN	200 mA (< 5 ms)
Max. permitted capacity FAN	58 µF
Ambient temperature ta (at lifetime 50,000 h)	-20 ... +45 °C
Max. casing temperature tc	55 °C
Storage temperature ts	-40 ... +80 °C

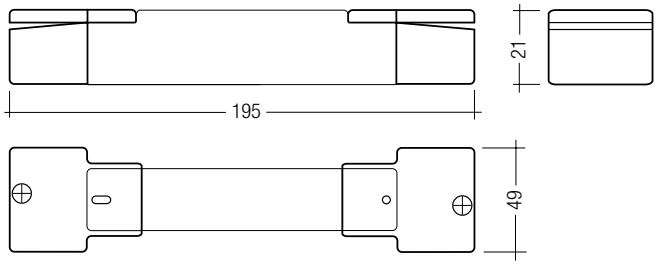

LMAI with strain relief set

→

For standards see data sheet

IP20 SELV RoHS

TALEXconverter LCAU 2x20 W one4all

LED control gear system component

Product description

- LED control gear for PREMIUM modules
- Output power: 2 x 20 W or 1 x 40 W
- Connecting cable, wire cross-section 0.5 – 2.5 mm²
- Power input on standby < 0.5 W
- Strain relief by remote LED control gear
- RJ45 connector for plug & play

Properties

- switchDIM (with memory function)
- colourSWITCH 2,700 – 6,500 K (with memory function) ①
- NEW DALI DEVICE Type 8 for tunable white
- Noise-free precise control via DALI, DSI signal or switchDIM
- Powerless switching via a digital interface (no need for switching via mains)
- Intelligent Temperature Guard (overtemperature protection)
- Short-circuit shutdown feature with automatic restart (every 7 s)
- No-load shutdown feature with automatic restart (every 7 s)
- Overload protection by reduction of performance ②
- SELV
- Plastic casing black
- Type of protection IP20 (remote LED control gear)

→ For product data sheet go to www.tridonic.com, or available on request

Technical data

Rated supply voltage	220 – 240 V
Input voltage, AC	198 – 264 V
Input voltage, DC ①	170 – 264 V
Rated current (at 230 V, 50 Hz)	0.21 A
Mains frequency	0 / 50 / 60 Hz
Efficiency	90 %
λ at 230 V, 50 Hz, full load	0.95
Control input ① ③	DSI, DALI, switchDIM, colourSWITCH
Stand-by power ④	< 0.5 W
Output voltage	49 V ±2 V
Output power	2 x 25 W / 1 x 40 W
Dimming range	15 – 100 %
Set up time (at 230 V, 50 Hz)	< 1 s
Switchover time AC/DC and DC/AC	< 1 s
Leakage current (FE)	0.25 mA
ta operating (at lifetime 50,000 h)	-20 ... +45 °C
Max. casing temperature (at lifetime 50,000 h)	65 °C

→

For standards see data sheet

In-built LED control gear

Remote LED control gear

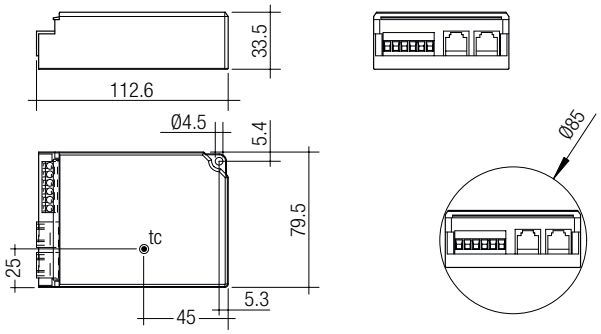

In-built LED control gear

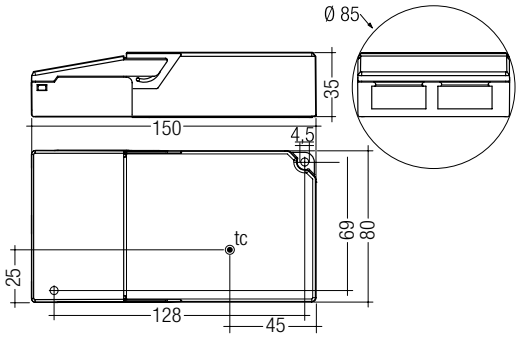

Remote LED control gear

Ordering data

Type	Article number	Packaging, carton	Packaging, pallet	Weight per pc.
LCAU 2x020/0048 L010 one4all	**86459414**	10 pc(s).	560 pc(s).	0.19 kg
LCAU 2x020/0048 L020 one4all	**86459108**	10 pc(s).	560 pc(s).	0.21 kg

① In DC operation the last set colour is used.
② If the overload is too high the LED control gear switches off and tries to restart every 7 s.
③ No colourSWITCH at DC operation.
④ No fan operation on standby.

ACCES-SORIES

TALEXxcessory CONNECT – RJ45 U

Product description

- Connection cable 1 or 2 m for connecting TALEXxmodule STARK and TALEXxconverter LCAU
- RJ45 unshielded

Ordering data

Type	Article number	Length L	Packaging	Weight per pc.
RJ45/RJ45 U 1.0m	24166480	1 m	1 pc(s).	0.040 kg
RJ45/RJ45 U 2.0m	24166481	2 m	1 pc(s).	0.079 kg

ACCES-SORIES

TALEXxcessory CONNECT – 10PIN PLUG / 10PIN PLUG

Product description

- Connection cable 0.2 m for connecting TALEXxmodule STARK and REMOTE LMAI
- 10-pin plug to 10-pin plug Molex
- Halogen free

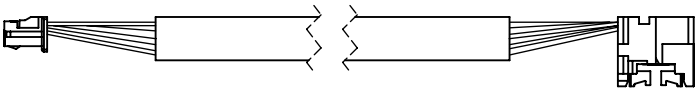

Ordering data

Type	Article number	Length L	Packaging, carton	Weight per pc.
10PIN PLUG/10PIN PLUG 0.2m	24166482	0.2 m	10 pc(s).	0.007 kg

ACCES-SORIES

TALEXXaccessory Mixing Cap

Product description

- Mixing chamber for homogenous light distribution
- To push on the SLE housing
- Glow wire test acc. IEC 60695-2-11 at 700 °C passed

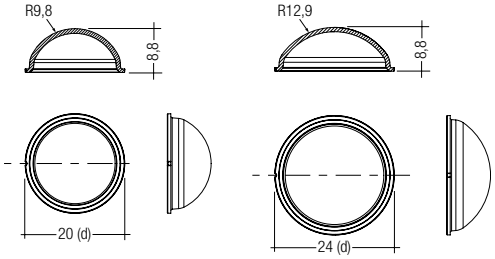

Ordering data

Type	Article number	Diameter d	Packaging, carton	Weight per pc.
LED Mixing Cap STARK SLE	**88167564**	20 mm	2,000 pc(s).	0.001 kg
LED Mixing Cap STARK SLE	**88167565**	24 mm	2,000 pc(s).	0.001 kg

ACCES-SORIES

Strain-relief set

Product description

- Strain relief for TALEXXconverter LMAI
- Glow wire test acc. IEC 60695-2-11 at 960 °C passed

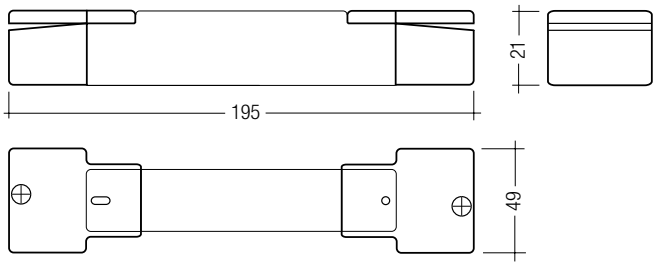

Ordering data

Type	Article number	Packaging carton	Weight per pc.
Strain-relief set	**86459424**	20 pc(s).	0.05 kg

TALEX(module STARK SLE GEN2 FOOD

STARK SLE

Product description

- Application specific colours for attractive product presentation
- For spotlights
- High efficiency up to 95 lm/W for the LED module
- High system efficiency up to 77 lm/W at tp = 65 °C
- High colour consistency
- Small LES (light emitting surface) diameter enables small beam angle for spotlights
- Excellent thermal management by COB technology
- NTC for temperature control
- Uniform radiation with Dam&Fill technology
- Fixing holes for M3 screws
- Built-in LED module
- Cooling required
- Long life time: L70 at > 50,000 operting hours
- Flexible operating mode

→ For product data sheet go to www.tridonic.com, or available on request

Technical data

Beam characteristic	140°
Ambient temperature ta	-25 ... +55 °C
tp_rated temperature ①	65 °C
Max. tc point temperature ①	75 °C
Risk group (EN 62471:2008)	1
Type of protection	IP00

→

For standards see data sheet

For colour temperatures and tolerances see data sheet

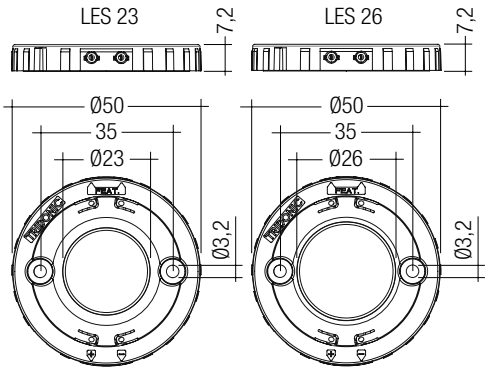

With housing (tp/tc pos. same as without housing) – Dimensions in mm

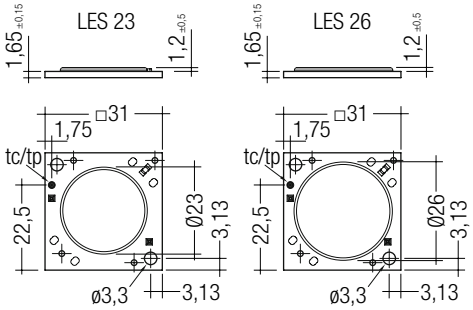

PURE (without housing) – Dimensions in mm

Ordering data

Type	Article number	Housing	Connection cable	Packaging, carton	Weight per pc.
STARK SLE G2 FOOD LES23 GOLD	89601665	yes	no	15 pc(s).	0.008 kg
STARK SLE G2 FOOD LES23 GOLD+	89601694	yes	no	15 pc(s).	0.008 kg
STARK SLE G2 FOOD LES23 FM	89601695	yes	no	15 pc(s).	0.008 kg
STARK SLE G2 FOOD LES23 MEAT+	89601662	yes	no	15 pc(s).	0.008 kg
STARK SLE G2 FOOD LES26 GOLD	89601668	yes	no	15 pc(s).	0.008 kg
STARK SLE G2 FOOD LES26 GOLD+	89601696	yes	no	15 pc(s).	0.008 kg
STARK SLE G2 FOOD LES26 FM	89601697	yes	no	15 pc(s).	0.008 kg
STARK SLE G2 FOOD LES26 MEAT+	89601678	yes	no	15 pc(s).	0.008 kg
STARK SLE G2 PURE FOOD LES23 GOLD	89601674	no	yes	20 pc(s).	0.010 kg
STARK SLE G2 PURE FOOD LES23 GOLD+	89601698	no	yes	20 pc(s).	0.010 kg
STARK SLE G2 PURE FOOD LES23 FM	89601699	no	yes	20 pc(s).	0.010 kg
STARK SLE G2 PURE FOOD LES23 MEAT+	89601671	no	yes	20 pc(s).	0.010 kg
STARK SLE G2 PURE FOOD LES26 GOLD	89601677	no	yes	20 pc(s).	0.010 kg
STARK SLE G2 PURE FOOD LES26 GOLD+	89601700	no	yes	20 pc(s).	0.010 kg
STARK SLE G2 PURE FOOD LES26 FM	89601701	no	yes	20 pc(s).	0.010 kg
STARK SLE G2 PURE FOOD LES26 MEAT+	89601679	no	yes	20 pc(s).	0.010 kg

Specific technical data

Type ②	Forward current ③ ④ ⑤	Luminous flux at tp = 25 °C ⑥	Luminous flux at tp = 65 °C ⑥	Power consumption module ⑦	Forward voltage module ⑦ ⑧	Energy classification
STARK SLE LES23 – Operating mode HE at 500 mA						
STARK SLE G2 FOOD LES23 GOLD	500 mA	1,600 lm	1,400 lm	16.5 W	33.1 V	A
STARK SLE G2 FOOD LES23 GOLD+	500 mA	1,200 lm	1,000 lm	16.5 W	33.1 V	A
STARK SLE G2 FOOD LES23 FM	500 mA	1,100 lm	950 lm	16.5 W	33.1 V	B
STARK SLE G2 FOOD LES23 MEAT+	500 mA	1,100 lm	1,000 lm	16.5 W	33.1 V	A
STARK SLE LES23 – Operating mode NM at 700 mA						
STARK SLE G2 FOOD LES23 GOLD	700 mA	2,150 lm	1,850 lm	23.8 W	33.9 V	A
STARK SLE G2 FOOD LES23 GOLD+	700 mA	1,650 lm	1,400 lm	23.8 W	33.9 V	B
STARK SLE G2 FOOD LES23 FM	700 mA	1,550 lm	1,300 lm	23.8 W	33.9 V	B
STARK SLE G2 FOOD LES23 MEAT+	700 mA	1,500 lm	1,350 lm	23.8 W	33.9 V	B
STARK SLE LES23 – Operating mode HO at 1,050 mA						
STARK SLE G2 FOOD LES23 GOLD	1,050 mA	3,050 lm	2,600 lm	37.1 W	35.3 V	A
STARK SLE G2 FOOD LES23 GOLD+	1,050 mA	2,300 lm	1,900 lm	37.1 W	35.3 V	B
STARK SLE G2 FOOD LES23 FM	1,050 mA	2,150 lm	1,800 lm	37.1 W	35.3 V	B
STARK SLE G2 FOOD LES23 MEAT+	1,050 mA	2,100 lm	1,900 lm	37.1 W	35.3 V	B
STARK SLE LES26 – Operating mode HE at 700 mA						
STARK SLE G2 FOOD LES26 GOLD	700 mA	2,200 lm	1,900 lm	23.2 W	33.2 V	A
STARK SLE G2 FOOD LES26 GOLD+	700 mA	1,750 lm	1,550 lm	23.2 W	33.2 V	A
STARK SLE G2 FOOD LES26 FM	700 mA	1,600 lm	1,350 lm	23.2 W	33.2 V	B
STARK SLE G2 FOOD LES26 MEAT+	700 mA	1,500 lm	1,350 lm	23.2 W	33.2 V	B
STARK SLE LES26 – Operating mode NM at 1,050 mA						
STARK SLE G2 FOOD LES26 GOLD	1,050 mA	3,150 lm	2,700 lm	36.0 W	34.3 V	A
STARK SLE G2 FOOD LES26 GOLD+	1,050 mA	2,500 lm	2,150 lm	36.0 W	34.3 V	B
STARK SLE G2 FOOD LES26 FM	1,050 mA	2,300 lm	1,950 lm	36.0 W	34.3 V	B
STARK SLE G2 FOOD LES26 MEAT+	1,050 mA	2,200 lm	1,900 lm	36.0 W	34.3 V	B
STARK SLE LES26 – Operating mode HO at 1,400 mA						
STARK SLE G2 FOOD LES26 GOLD	1,400 mA	4,050 lm	3,450 lm	49.5 W	35.3 V	A
STARK SLE G2 FOOD LES26 GOLD+	1,400 mA	3,200 lm	2,750 lm	49.5 W	35.3 V	B
STARK SLE G2 FOOD LES26 FM	1,400 mA	2,950 lm	2,400 lm	49.5 W	35.3 V	B
STARK SLE G2 FOOD LES26 MEAT+	1,400 mA	2,850 lm	2,400 lm	49.5 W	35.3 V	B

① If the max. temperature limits are exceeded, the life of the module will be greatly reduced or the module may be damaged. The temperature of the TALEX module at the tp point is to be measured in the thermally stable state with a temperature sensor or a temperature sensitive sticker according to EN 60598-1. For the precise position of the tp point see the above diagram.
② HE ... high efficiency, NM ... nominal mode, HO ... high output.
③ Exceeding the max. operating current leads to an overload on the TALEX module. This may in turn result in a significant reduction in lifetime or even destruction of the TALEX module.
④ Max. permissible surge current: 3 A, duration max. 10 µs.
⑤ Ripple max. 50 % of typ. forward current.
⑥ Tolerance range for optical data: ±10 %.
⑦ All values at tp = 65 °C.
⑧ Tolerance range voltage: ±10 %.

TALEX(module STARK SLE GEN2 SELECT
STARK SLE

Product description

- For spotlights and downlights
- High colour rendering index CRI > 90
- High efficiency up to 116 lm/W for the LED module
- High system efficiency up to 90 lm/W at tp = 65 °C
- High colour consistency (MacAdam 3)
- Small LES (light emitting surface) diameter enables small beam angle for spotlights
- Excellent thermal management by COB technology
- NTC for temperature control for type LES23 and LES26
- Uniform radiation with Dam&Fill technology
- Fixing holes for M3 screws
- Built-in LED module
- Cooling required
- Long life time: up to 80 % luminous flux after 50,000 operating hours
- Flexible operating mode

→ For product data sheet go to www.tridonic.com, or available on request

Technical data

Beam characteristic	140°
Ambient temperature ta	-25 ... +55 °C
tp_rated temperature ①	65 °C
Max. tc point temperature ①	75 °C
Risk group (EN 62471:2008)	1
Type of protection	IP00

For standards see data sheet

For colour temperatures and tolerances see data sheet

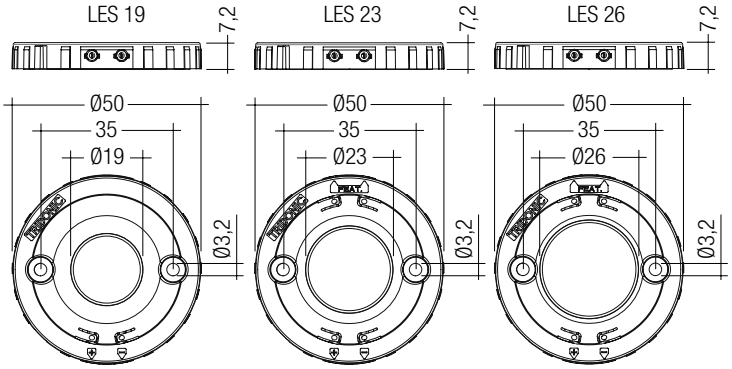

With housing (tp/tc pos. same as without housing) – Dimensions in mm

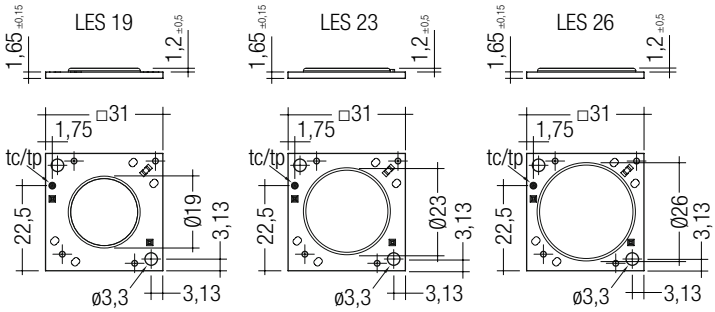

PURE (without housing) – Dimensions in mm

Ordering data

Type	Article number	Colour temperature	Housing	Connection cable	Packaging, carton	Weight per pc.
STARK SLE G2 LES19 930 SEL	89601660	3,000 K	yes	no	15 pc(s).	0.008 kg
STARK SLE G2 LES19 940 SEL	89601661	4,000 K	yes	no	15 pc(s).	0.008 kg
STARK SLE G2 LES23 930 SEL	89601663	3,000 K	yes	no	15 pc(s).	0.008 kg
STARK SLE G2 LES23 940 SEL	89601664	4,000 K	yes	no	15 pc(s).	0.008 kg
STARK SLE G2 LES26 930 SEL	89601666	3,000 K	yes	no	15 pc(s).	0.008 kg
STARK SLE G2 LES26 940 SEL	89601667	4,000 K	yes	no	15 pc(s).	0.008 kg
STARK SLE PURE G2 LES19 930 SEL	89601669	3,000 K	no	yes	20 pc(s).	0.010 kg
STARK SLE PURE G2 LES 19940 SEL	89601670	4,000 K	no	yes	20 pc(s).	0.010 kg
STARK SLE PURE G2 LES23 930 SEL	89601672	3,000 K	no	yes	20 pc(s).	0.010 kg
STARK SLE PURE G2 LES23 940 SEL	89601673	4,000 K	no	yes	20 pc(s).	0.010 kg
STARK SLE PURE G2 LES26 930 SEL	89601675	3,000 K	no	yes	20 pc(s).	0.010 kg
STARK SLE PURE G2 LES26 940 SEL	89601676	4,000 K	no	yes	20 pc(s).	0.010 kg

Specific technical data

Type ②	Photometric code	Forward current ③ ④ ⑤	Luminous flux at tp = 25 °C ⑥	Luminous flux at tp = 65 °C ⑥	Power consumption module ⑦	Forward voltage module ⑦ ⑧	Luminous efficacy module at tp = 25 °C	Luminous efficacy module at tp = 65 °C	Luminous efficacy system at tp = 65 °C	Colour rendering index CRI	Energy classification
STARK SLE LES19 – Operating mode HE at 350 mA											
STARK SLE G2 LES19 930 SEL	930/3x9	350 mA	1,200 lm	1,050 lm	11.6 W	33.2 V	103 lm/W	91 lm/W	82 lm/W	90	A+
STARK SLE G2 LES19 940 SEL	940/3x9	350 mA	1,300 lm	1,100 lm	11.6 W	33.2 V	112 lm/W	95 lm/W	86 lm/W	90	A+
STARK SLE LES19 – Operating mode NM at 500 mA											
STARK SLE G2 LES19 930 SEL	930/3x9	500 mA	1,650 lm	1,450 lm	17.1 W	34.2 V	96 lm/W	85 lm/W	77 lm/W	90	A
STARK SLE G2 LES19 940 SEL	940/3x9	500 mA	1,800 lm	1,550 lm	17.1 W	34.2 V	105 lm/W	91 lm/W	82 lm/W	90	A+
STARK SLE LES19 – Operating mode HO at 700 mA											
STARK SLE G2 LES19 930 SEL	930/3x9	700 mA	2,200 lm	1,900 lm	24.7 W	35.3 V	89 lm/W	77 lm/W	69 lm/W	90	A
STARK SLE G2 LES19 940 SEL	940/3x9	700 mA	2,350 lm	2,050 lm	24.7 W	35.3 V	95 lm/W	83 lm/W	75 lm/W	90	A
STARK SLE LES23 – Operating mode HE at 500 mA											
STARK SLE G2 LES23 930 SEL	930/3x9	500 mA	1,800 lm	1,550 lm	16.5 W	33.1 V	109 lm/W	94 lm/W	85 lm/W	90	A+
STARK SLE G2 LES23 940 SEL	940/3x9	500 mA	1,900 lm	1,650 lm	16.5 W	33.1 V	115 lm/W	100 lm/W	90 lm/W	90	A+
STARK SLE LES23 – Operating mode NM at 700 mA											
STARK SLE G2 LES23 930 SEL	930/3x9	700 mA	2,450 lm	2,100 lm	23.8 W	33.9 V	103 lm/W	88 lm/W	79 lm/W	90	A+
STARK SLE G2 LES23 940 SEL	940/3x9	700 mA	2,600 lm	2,250 lm	23.8 W	33.9 V	109 lm/W	95 lm/W	86 lm/W	90	A+
STARK SLE LES23 – Operating mode HO at 1,050 mA											
STARK SLE G2 LES23 930 SEL	930/3x9	1,050 mA	3,400 lm	2,900 lm	37.1 W	35.3 V	92 lm/W	78 lm/W	70 lm/W	90	A
STARK SLE G2 LES23 940 SEL	940/3x9	1,050 mA	3,600 lm	3,100 lm	37.1 W	35.3 V	97 lm/W	84 lm/W	76 lm/W	90	A
STARK SLE LES26 – Operating mode HE at 700 mA											
STARK SLE G2 LES26 930 SEL	930/3x9	700 mA	2,450 lm	2,100 lm	23.2 W	33.2 V	106 lm/W	91 lm/W	82 lm/W	90	A+
STARK SLE G2 LES26 940 SEL	940/3x9	700 mA	2,600 lm	2,250 lm	23.2 W	33.2 V	112 lm/W	97 lm/W	87 lm/W	90	A+
STARK SLE LES26 – Operating mode NM at 1,050 mA											
STARK SLE G2 LES26 930 SEL	930/3x9	1,050 mA	3,500 lm	3,000 lm	36.0 W	34.3 V	97 lm/W	83 lm/W	75 lm/W	90	A
STARK SLE G2 LES26 940 SEL	940/3x9	1,050 mA	3,750 lm	3,250 lm	36.0 W	34.3 V	104 lm/W	90 lm/W	80 lm/W	90	A+
STARK SLE LES26 – Operating mode HO at 1,400 mA											
STARK SLE G2 LES26 930 SEL	930/3x9	1,400 mA	4,500 lm	3,850 lm	49.5 W	35.3 V	91 lm/W	78 lm/W	70 lm/W	90	A
STARK SLE G2 LES26 940 SEL	940/3x9	1,400 mA	4,750 lm	4,100 lm	49.5 W	35.3 V	96 lm/W	83 lm/W	75 lm/W	90	A

① If the max. temperature limits are exceeded, the life of the module will be greatly reduced or the module may be damaged. The temperature of the TALEX(module at the tp point is to be measured in the thermally stable state with a temperature sensor or a temperature sensitive sticker according to EN 60598-1. For the precise position of the tp point see the above diagram.
② HE ... high efficiency, NM ... nominal mode, HO ... high output.
③ Exceeding the max. operating current leads to an overload on the TALEX(module. This may in turn result in a significant reduction in lifetime or even destruction of the TALEX(module.
④ Max. permissible surge current: 3 A, duration max. 10 µs.
⑤ Ripple max. 50 % of typ. forward current.
⑥ Tolerance range for optical data: ±10 %.
⑦ All values at tp = 65 °C.
⑧ Tolerance range voltage: ±10 %.

TALEX(module STARK SLE GEN2 COI

STARK SLE

Product description

- LED module for hospital and medical tasks
- Fulfills the requirements for Cyanosis observation lighting according to the standard AS/NZS 1680.2.5:1997
- For spotlights and downlights
- High colour rendering index CRI > 90
- High efficiency up to 116 lm/W for the LED module
- High system efficiency up to 90 lm/W at tp = 65 °C
- High colour consistency (MacAdam 3)
- Small LES (light emitting surface) diameter enables small beam angle for spotlights
- Excellent thermal management by COB technology
- NTC for temperature control for type LES23 and LES26
- Uniform radiation with Dam&Fill technology
- Fixing holes for M3 screws
- Built-in LED module
- Cooling required
- Long life time: up to 80 % luminous flux after 50,000 operating hours
- Flexible operating mode

→ For product data sheet go to www.tridonic.com, or available on request

Technical data

Beam characteristic	140°
Ambient temperature ta	-25 ... +55 °C
tp_rated temperature ①	65 °C
Max. tc point temperature ①	75 °C
Risk group (EN 62471:2008)	1
Type of protection	IP00

For standards see data sheet

For colour temperatures and tolerances see data sheet

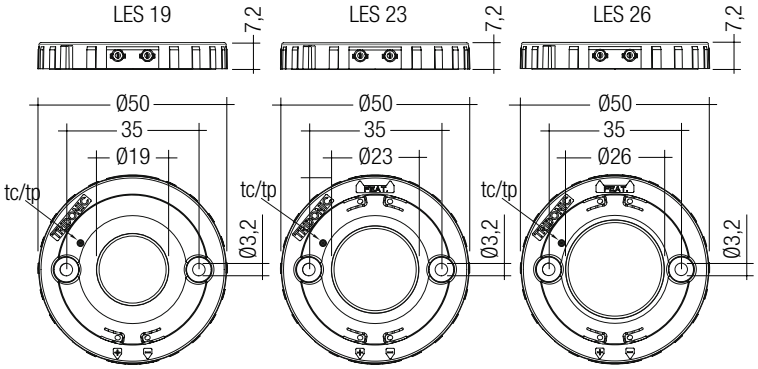

Ordering data

Type	Article number	Colour temperature	Housing	Connection cable	Packaging, carton	Weight per pc.
STARK SLE G2 LES19 4000K COI	**89601737**	4,000 K	yes	no	15 pc(s).	0.008 kg
STARK SLE G2 LES23 4000K COI	**89601738**	4,000 K	yes	no	15 pc(s).	0.008 kg
STARK SLE G2 LES26 4000K COI	**89601739**	4,000 K	yes	no	15 pc(s).	0.008 kg

Specific technical data

Type ②	Photometric code	Forward current ③ ④ ⑤	Luminous flux at tp = 25 °C ⑥	Luminous flux at tp = 65 °C ⑥	Power consumption module ⑦	Forward voltage module ⑦ ⑧	Luminous efficacy module at tp = 25 °C	Luminous efficacy module at tp = 65 °C	Luminous efficacy system at tp = 65 °C	Colour rendering index CRI	Energy classification
Operating mode HE											
STARK SLE G2 LES19 4000K COI	940/3x9	350 mA	1,300 lm	1,100 lm	11.6 W	33.2 V	112 lm/W	95 lm/W	86 lm/W	90	A+
STARK SLE G2 LES23 4000K COI	940/3x9	500 mA	1,900 lm	1,650 lm	16.5 W	33.1 V	115 lm/W	100 lm/W	90 lm/W	90	A+
STARK SLE G2 LES26 4000K COI	940/3x9	700 mA	2,600 lm	2,250 lm	23.2 W	33.2 V	112 lm/W	97 lm/W	97 lm/W	90	A+
Operating mode HO											
STARK SLE G2 LES19 4000K COI	940/3x9	500 mA	1,800 lm	1,550 lm	17.1 W	34.2 V	105 lm/W	91 lm/W	82 lm/W	90	A+
STARK SLE G2 LES23 4000K COI	940/3x9	700 mA	2,600 lm	2,250 lm	23.8 W	33.9 V	109 lm/W	95 lm/W	86 lm/W	90	A+
STARK SLE G2 LES26 4000K COI	940/3x9	1,050 mA	3,750 lm	3,250 lm	36.0 W	34.3 V	104 lm/W	90 lm/W	89 lm/W	90	A+

① If the max. temperature limits are exceeded, the life of the module will be greatly reduced or the module may be damaged. The temperature of the TALEX module at the tp point is to be measured in the thermally stable state with a temperature sensor or a temperature sensitive sticker according to EN 60598-1. For the precise position of the tp point see the above diagram.
② HE ... high efficiency, NM ... nominal mode.
③ Exceeding the max. operating current leads to an overload on the TALEX module. This may in turn result in a significant reduction in lifetime or even destruction of the TALEX module.
④ Max. permissible surge current: 3 A, duration max. 10 µs.
⑤ Ripple max. 50 % of typ. forward current.
⑥ Tolerance range for optical data: ±10 %.
⑦ All values at tp = 65 °C.
⑧ Tolerance range voltage: ±10 %.

NEW

TALEX(module STARK SLE GEN3 FOOD
STARK SLE

Product description

- Application specific colours for attractive product presentation
- For spotlights
- High efficiency up to 137 lm/W for the LED module
- High system efficiency up to 113 lm/W at tp = 65 °C
- High colour consistency
- Small LES (light emitting surface) diameter enables small beam angle for spotlights
- Excellent thermal management by COB technology
- NTC for temperature control
- Uniform radiation with Dam&Fill technology
- Fixing holes for M3 screws
- Built-in LED module
- Cooling required
- Long life time: L70 at > 50,000 operting hours
- Flexible operating mode

→ For product data sheet go to www.tridonic.com, or available on request

Technical data

Beam characteristic	140°
Ambient temperature ta	-25 ... +55 °C
tp_rated temperature ①	65 °C
Max. tc point temperature ①	up to 90 °C
Risk group (EN 62471:2008)	1
Type of protection	IP00

→

For standards see data sheet

For colour temperatures and tolerances see data sheet

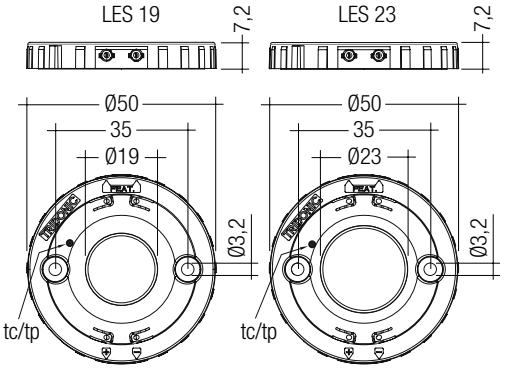

With housing (tc/tp position same as without housing) – Dimensions in mm

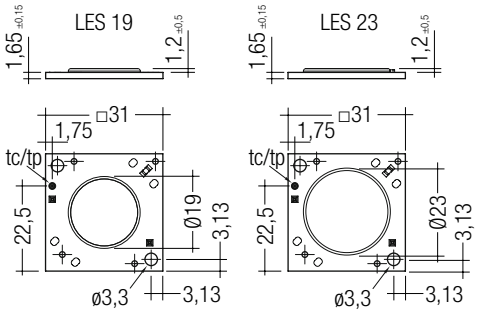

PURE (without housing) – Dimensions in mm

Ordering data

Type②	Article number	Housing	Connection cable	Packaging, carton	Weight per pc.
STARK-SLE-G3-19-Gold	89601856	yes	no	15 pc(s).	0.009 kg
STARK-SLE-G3-19-Gold+	89601857	yes	no	15 pc(s).	0.009 kg
STARK-SLE-G3-19-Fresh Meat	89601859	yes	no	15 pc(s).	0.009 kg
STARK-SLE-G3-19-Meat+	89601858	yes	no	15 pc(s).	0.009 kg
STARK-SLE-G3-23-Gold	89601860	yes	no	15 pc(s).	0.009 kg
STARK-SLE-G3-23-Gold+	89601861	yes	no	15 pc(s).	0.009 kg
STARK-SLE-G3-23-Fresh Meat	89601863	yes	no	15 pc(s).	0.009 kg
STARK-SLE-G3-23-Meat+	89601862	yes	no	15 pc(s).	0.009 kg
STARK-SLE-G3-PURE-19-Gold	89601848	no	yes	20 pc(s).	0.009 kg
STARK-SLE-G3-PURE-19-Gold+	89601849	no	yes	20 pc(s).	0.009 kg
STARK-SLE-G3-PURE-19-Fresh Meat	89601851	no	yes	20 pc(s).	0.009 kg
STARK-SLE-G3-PURE-19-Meat+	89601850	no	yes	20 pc(s).	0.009 kg
STARK-SLE-G3-PURE-23-Gold	89601852	no	yes	20 pc(s).	0.009 kg
STARK-SLE-G3-PURE-23-Gold+	89601853	no	yes	20 pc(s).	0.009 kg
STARK-SLE-G3-PURE-23-Fresh Meat	89601855	no	yes	20 pc(s).	0.009 kg
STARK-SLE-G3-PURE-23-Meat+	89601854	no	yes	20 pc(s).	0.009 kg

Specific technical data

Type②	Forward current ③④⑤	Luminous flux at tp = 25 °C⑥	Luminous flux at tp = 65 °C⑥	Power consumption module⑦	Min. forward voltage module at tp = 65 °C	Max. forward voltage module at tp = 25 °C	Energy classification
STARK-SLE-19 – Operating mode HE at 350 mA							
STARK-SLE-G3-19-Gold	350 mA	1,130 lm	970 lm	11.7 W	32.2 V	36.5 V	A
STARK-SLE-G3-19-Gold+	350 mA	840 lm	730 lm	11.7 W	32.2 V	36.5 V	A
STARK-SLE-G3-19-Fresh Meat	350 mA	790 lm	680 lm	11.7 W	32.2 V	36.5 V	A
STARK-SLE-G3-19-Meat+	350 mA	760 lm	660 lm	11.7 W	32.2 V	36.5 V	A
STARK-SLE-19 – Operating mode HO at 1,400 mA							
STARK-SLE-G3-19-Gold	1,400 mA	3,930 lm	3,380 lm	54.0 W	37.4 V	41.8 V	A
STARK-SLE-G3-19-Gold+	1,400 mA	2,950 lm	2,530 lm	54.0 W	37.4 V	41.8 V	B
STARK-SLE-G3-19-Fresh Meat	1,400 mA	2,760 lm	2,380 lm	54.0 W	37.4 V	41.8 V	B
STARK-SLE-G3-19-Meat+	1,400 mA	2,620 lm	2,250 lm	54.0 W	37.4 V	41.8 V	B
STARK-SLE-23 – Operating mode HE at 700 mA							
STARK-SLE-G3-23-Gold	700 mA	2,250 lm	1,930 lm	23.8 W	32.9 V	37.2 V	A
STARK-SLE-G3-23-Gold+	700 mA	1,650 lm	1,420 lm	23.8 W	32.9 V	37.2 V	B
STARK-SLE-G3-23-Fresh Meat	700 mA	1,530 lm	1,320 lm	23.8 W	32.9 V	37.2 V	B
STARK-SLE-G3-23-Meat+	700 mA	1,500 lm	1,290 lm	23.8 W	32.9 V	37.2 V	B
STARK-SLE-23 – Operating mode HO at 1,750 mA							
STARK-SLE-G3-23-Gold	1,750 mA	5,000 lm	4,310 lm	66.0 W	36.5 V	40.9 V	A
STARK-SLE-G3-23-Gold+	1,750 mA	3,720 lm	3,200 lm	66.0 W	36.5 V	40.9 V	B
STARK-SLE-G3-23-Fresh Meat	1,750 mA	3,500 lm	3,000 lm	66.0 W	36.5 V	40.9 V	B
STARK-SLE-G3-23-Meat+	1,750 mA	3,340 lm	2,870 lm	66.0 W	36.5 V	40.9 V	B

① If the max. temperature limits are exceeded, the life of the module will be greatly reduced or the module may be damaged.
The temperature of the TALEX(module at the tp point is to be measured in the thermally stable state with a temperature sensor or a temperature sensitive sticker according to EN 60598-1. For the precise position of the tp point see the above diagram.
② HE ... high efficiency, BLO ... best lamp operation, HO ... high output.
③ Exceeding the max. operating current leads to an overload on the TALEX(module.
This may in turn result in a significant reduction in lifetime or even destruction of the TALEX(module.
④ Max. permissible surge current: 3 A, duration max. 10 µs.
⑤ Max. permissible repetitive peak current for STARK-SLE-G3-19 is 1,680 mA.
Max. permissible repetitive peak current for STARK-SLE-G3-23 is 2,400 mA.
⑥ Tolerance range for optical data: ±10 %.
⑦ All values at tp = 65 °C.

Zhaga CE RoHS

NEW

TALEX(module STARK SLE GEN3 SELECT
STARK SLE

Product description

- For spotlights and downlights
- High efficiency up to 118 lm/W for the LED module
- High system efficiency up to 98 lm/W at tp = 65 °C
- BLO operation mode: Best LED Operation for optimum operation and constant luminous flux at all colour temperatures in combination with Tridonic LED control gear of TOP and ECO series
- High colour consistency (MacAdam 3)
- Small LES (light emitting surface) diameter enables small beam angle for spotlights
- Excellent thermal management by COB technology
- Uniform radiation with Dam&Fill technology
- Fixing holes for M3 screws
- Built-in LED module
- Cooling required
- Flexible operating mode
- 5-year guarantee

→ For product data sheet go to www.tridonic.com, or available on request

Technical data

Beam characteristic	140°
Ambient temperature ta	-25 ... +50 °C
tp_rated temperature ①	65 °C
Max. tc point temperature ①	up to 90 °C
Risk group (EN 62471:2008)	1
Type of protection	IP00

→

For standards see data sheet

For colour temperatures and tolerances see data sheet

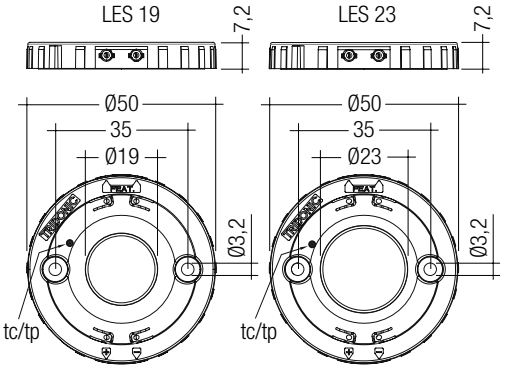

With housing (tc/tp position same as without housing) – Dimensions in mm

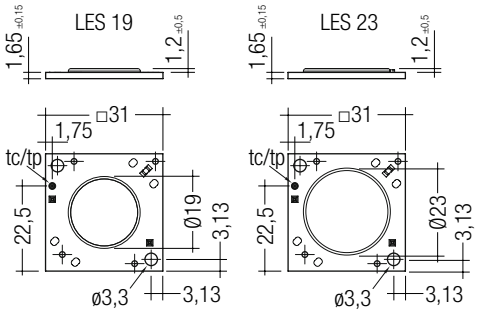

PURE (without housing) – Dimensions in mm

Ordering data

Type	Article number	Colour temperature	Housing	Connection cable	Packaging, carton	Weight per pc.
STARK-SLE-G3-19-2000-930-SEL	**89601834**	3,000 K	yes	no	15 pc(s).	0.009 kg
STARK-SLE-G3-19-2000-940-SEL	**89601835**	4,000 K	yes	no	15 pc(s).	0.009 kg
STARK-SLE-G3-19-3000-930-SEL	**89601844**	3,000 K	yes	no	15 pc(s).	0.009 kg
STARK-SLE-G3-19-3000-940-SEL	**89601845**	4,000 K	yes	no	15 pc(s).	0.009 kg
STARK-SLE-G3-23-3000-930-SEL	**89601836**	3,000 K	yes	no	15 pc(s).	0.009 kg
STARK-SLE-G3-23-3000-940-SEL	**89601837**	4,000 K	yes	no	15 pc(s).	0.009 kg
STARK-SLE-G3-23-4000-930-SEL	**89601838**	3,000 K	yes	no	15 pc(s).	0.009 kg
STARK-SLE-G3-23-4000-940-SEL	**89601839**	4,000 K	yes	no	15 pc(s).	0.009 kg

Ordering data

Type	Article number	Colour temperature	Housing	Connection cable	Packaging, carton	Weight per pc.
STARK-SLE-PURE-G3-19-2000-930-SEL	89601818	3,000 K	no	yes	20 pc(s).	0.009 kg
STARK-SLE-PURE-G3-19-2000-940-SEL	89601819	4,000 K	no	yes	20 pc(s).	0.009 kg
STARK-SLE-PURE-G3-19-3000-930-SEL	89601840	3,000 K	no	yes	20 pc(s).	0.009 kg
STARK-SLE-PURE-G3-19-3000-940-SEL	89601841	4,000 K	no	yes	20 pc(s).	0.009 kg
STARK-SLE-PURE-G3-23-3000-930-SEL	89601820	3,000 K	no	yes	20 pc(s).	0.009 kg
STARK-SLE-PURE-G3-23-3000-940-SEL	89601821	4,000 K	no	yes	20 pc(s).	0.009 kg
STARK-SLE-PURE-G3-23-4000-930-SEL	89601822	3,000 K	no	yes	20 pc(s).	0.009 kg
STARK-SLE-PURE-G3-23-4000-940-SEL	89601823	4,000 K	no	yes	20 pc(s).	0.009 kg

Specific technical data

Type ②	Photo-metric code	Forward current ③ ④ ⑤	Luminous flux at tp = 25 °C ⑥	Luminous flux at tp = 65 °C ⑥	Power consumption module ⑦	Min. forward voltage module at tp = 65 °C	Max. forward voltage module at tp = 25 °C	Luminous efficacy module at tp = 25 °C	Luminous efficacy module at tp = 65 °C	Luminous efficacy system at tp = 65 °C ⑧	Colour rendering index CRI	Energy classifi-cation
STARK-SLE-19-2000 – Operating mode HE at 350 mA												
STARK-SLE-G3-19-2000-930-SEL	930/349	350 mA	1,200 lm	1,110 lm	11.9 W	32.9 V	37.2 V	101 lm/W	93 lm/W	84 lm/W	90	A+
STARK-SLE-G3-19-2000-940-SEL	940/349	350 mA	1,360 lm	1,250 lm	11.9 W	32.9 V	37.2 V	114 lm/W	105 lm/W	95 lm/W	90	A+
STARK-SLE-19-2000 – Operating mode BLO												
STARK-SLE-G3-19-2000-930-SEL	930/349		1,930 lm	1,780 lm	21.5 W	34.6 V	38.9 V	90 lm/W	83 lm/W	75 lm/W	90	A
STARK-SLE-G3-19-2000-940-SEL	940/349		1,990 lm	1,830 lm	19.5 W	34.3 V	38.6 V	102 lm/W	94 lm/W	84 lm/W	90	A+
STARK-SLE-19-2000 – Operating mode HO at 1,050 mA												
STARK-SLE-G3-19-2000-930-SEL	930/349	1,050 mA	3,060 lm	2,800 lm	40.9 W	37.7 V	42.1 V	75 lm/W	68 lm/W	62 lm/W	90	A
STARK-SLE-G3-19-2000-940-SEL	940/349	1,050 mA	3,480 lm	3,170 lm	40.9 W	37.7 V	42.1 V	85 lm/W	78 lm/W	70 lm/W	90	A
STARK-SLE-19-3000 – Operating mode HE at 350 mA												
STARK-SLE-G3-19-3000-930-SEL	930/349	350 mA	1,200 lm	1,110 lm	11.7 W	32.2 V	36.5 V	103 lm/W	95 lm/W	85 lm/W	90	A+
STARK-SLE-G3-19-3000-940-SEL	940/349	350 mA	1,330 lm	1,230 lm	11.7 W	32.2 V	36.5 V	114 lm/W	105 lm/W	95 lm/W	90	A+
STARK-SLE-19-3000 – Operating mode BLO												
STARK-SLE-G3-19-3000-930-SEL	930/349		2,820 lm	2,590 lm	32.5 W	34.9 V	39.2 V	87 lm/W	80 lm/W	72 lm/W	90	A
STARK-SLE-G3-19-3000-940-SEL	940/349		2,830 lm	2,600 lm	28.5 W	34.4 V	38.7 V	99 lm/W	91 lm/W	82 lm/W	90	A+
STARK-SLE-19-3000 – Operating mode HO at 1,400 mA												
STARK-SLE-G3-19-3000-930-SEL	930/349	1,400 mA	4,040 lm	3,680 lm	54.0 W	37.4 V	41.8 V	75 lm/W	68 lm/W	61 lm/W	90	A
STARK-SLE-G3-19-3000-940-SEL	940/349	1,400 mA	4,490 lm	4,090 lm	54.0 W	37.4 V	41.8 V	83 lm/W	76 lm/W	68 lm/W	90	A
STARK-SLE-23-3000 – Operating mode HE at 500 mA												
STARK-SLE-G3-23-3000-930-SEL	930/349	500 mA	1,710 lm	1,520 lm	16.9 W	32.6 V	36.9 V	101 lm/W	90 lm/W	81 lm/W	90	A+
STARK-SLE-G3-23-3000-940-SEL	940/349	500 mA	1,940 lm	1,790 lm	16.9 W	32.6 V	36.9 V	115 lm/W	106 lm/W	95 lm/W	90	A+
STARK-SLE-23-3000 – Operating mode BLO												
STARK-SLE-G3-23-3000-930-SEL	930/349		2,750 lm	2,430 lm	30.0 W	34.1 V	38.5 V	92 lm/W	81 lm/W	73 lm/W	90	A
STARK-SLE-G3-23-3000-940-SEL	940/349		2,950 lm	2,700 lm	28.1 W	33.9 V	38.2 V	105 lm/W	96 lm/W	86 lm/W	90	A+
STARK-SLE-23-3000 – Operating mode HO at 1,400 mA												
STARK-SLE-G3-23-3000-930-SEL	930/349	1,400 mA	4,240 lm	3,680 lm	52.8 W	36.5 V	40.9 V	80 lm/W	70 lm/W	63 lm/W	90	A
STARK-SLE-G3-23-3000-940-SEL	940/349	1,400 mA	4,700 lm	4,270 lm	52.8 W	36.5 V	40.9 V	89 lm/W	81 lm/W	73 lm/W	90	A
STARK-SLE-23-4000 – Operating mode HE at 700 mA												
STARK-SLE-G3-23-4000-930-SEL	930/349	700 mA	2,460 lm	2,260 lm	23.8 W	32.9 V	37.2 V	103 lm/W	95 lm/W	85 lm/W	90	A+
STARK-SLE-G3-23-4000-940-SEL	940/349	700 mA	2,670 lm	2,410 lm	23.8 W	32.9 V	37.2 V	112 lm/W	101 lm/W	91 lm/W	90	A+
STARK-SLE-23-4000 – Operating mode BLO												
STARK-SLE-G3-23-4000-930-SEL	930/349		3,800 lm	3,520 lm	41.0 W	34.4 V	38.8 V	93 lm/W	86 lm/W	77 lm/W	90	A
STARK-SLE-G3-23-4000-940-SEL	940/349		4,050 lm	3,600 lm	39.0 W	34.3 V	38.6 V	104 lm/W	92 lm/W	83 lm/W	90	A+
STARK-SLE-23-4000 – Operating mode HO at 1,750 mA												
STARK-SLE-G3-23-4000-930-SEL	930/349	1,750 mA	5,400 lm	5,020 lm	66.0 W	36.5 V	40.9 V	82 lm/W	76 lm/W	68 lm/W	90	A
STARK-SLE-G3-23-4000-940-SEL	940/349	1,750 mA	6,020 lm	5,200 lm	66.0 W	36.5 V	40.9 V	91 lm/W	79 lm/W	71 lm/W	90	A

① If the max. temperature limits are exceeded, the life of the module will be greatly reduced or the module may be damaged.
The temperature of the TALEX module at the tp point is to be measured in the thermally stable state with a temperature sensor or a temperature sensitive sticker according to EN 60598-1. For the precise position of the tp point see the above diagram.
② HE ... high efficiency, BLO ... best lamp operation, HO ... high output.
③ Exceeding the max. operating current leads to an overload on the TALEX module.
This may in turn result in a significant reduction in lifetime or even destruction of the TALEX module.
④ Max. permissible surge current: 3 A, duration max. 10 µs.
⑤ Max. permissible repetitive peak current for STARK-SLE-G3-19-2000 is 1,200 mA. Max. permissible repetitive peak current for STARK-SLE-G3-19-3000 is 1,680 mA.
Max. permissible repetitive peak current for STARK-SLE-G3-23-3000 is 1,920 mA. Max. permissible repetitive peak current for STARK-SLE-G3-23-4000 is 2,400 mA.
⑥ Tolerance range for optical data: ±10 %.
⑦ All values at tp = 65 °C.
⑧ Assumed efficiency for the LED control gear is 0.9.

Zhaga CE RoHS

NEW

TALEX(module STARK SLE GEN3 CLASSIC

STARK SLE

Product description

- For spotlights and downlights
- High efficiency up to 137 lm/W for the LED module
- High system efficiency up to 113 lm/W at tp = 65 °C
- BLO operation mode: Best LED Operation for optimum operation and constant luminous flux at all colour temperatures in combination with Tridonic LED control gear of TOP and ECO series
- High colour consistency (MacAdam 3)
- Small LES (light emitting surface) diameter enables small beam angle for spotlights
- Excellent thermal management by COB technology
- Uniform radiation with Dam&Fill technology
- Fixing holes for M3 screws
- Built-in LED module
- Cooling required
- Flexible operating mode
- 5-year guarantee

→ For product data sheet go to www.tridonic.com, or available on request

Technical data

Beam characteristic	140°
Ambient temperature ta	-25 ... +50 °C
tp_rated temperature ①	65 °C
Max. tc point temperature ①	up to 90 °C
Risk group (EN 62471:2008)	1
Type of protection	IP00

→

For standards see data sheet

For colour temperatures and tolerances see data sheet

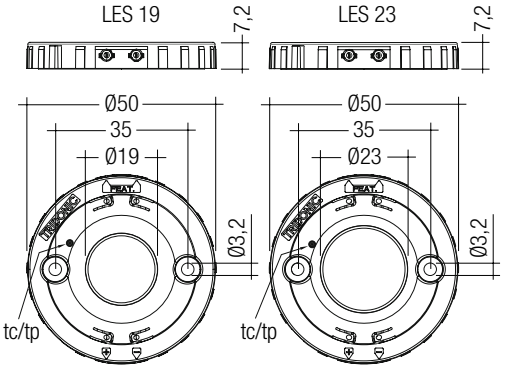

With housing (tc/tp position same as without housing) – Dimensions in mm

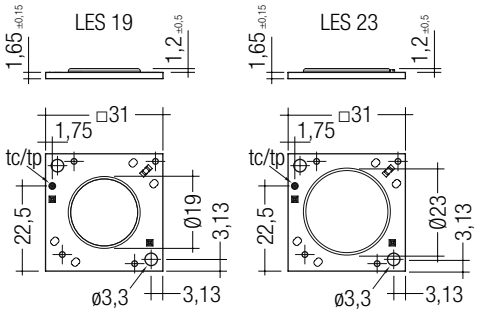

PURE (without housing) – Dimensions in mm

Ordering data

Type	Article number	Colour temperature	Housing	Connection cable	Packaging, carton	Weight per pc.
STARK-SLE-G3-19-2000-830-CLA	89601800	3,000 K	yes	no	15 pc(s).	0.009 kg
STARK-SLE-G3-19-2000-840-CLA	89601801	4,000 K	yes	no	15 pc(s).	0.009 kg
STARK-SLE-G3-19-3000-830-CLA	89601810	3,000 K	yes	no	15 pc(s).	0.009 kg
STARK-SLE-G3-19-3000-840-CLA	89601811	4,000 K	yes	no	15 pc(s).	0.009 kg
STARK-SLE-G3-23-3000-830-CLA	89601802	3,000 K	yes	no	15 pc(s).	0.009 kg
STARK-SLE-G3-23-3000-840-CLA	89601803	4,000 K	yes	no	15 pc(s).	0.009 kg
STARK-SLE-G3-23-4000-830-CLA	89601804	3,000 K	yes	no	15 pc(s).	0.009 kg
STARK-SLE-G3-23-4000-840-CLA	89601805	4,000 K	yes	no	15 pc(s).	0.009 kg
STARK-SLE-PURE-G3-19-2000-830-CLA	89601784	3,000 K	no	yes	20 pc(s).	0.009 kg
STARK-SLE-PURE-G3-19-2000-840-CLA	89601785	4,000 K	no	yes	20 pc(s).	0.009 kg
STARK-SLE-PURE-G3-19-3000-830-CLA	89601806	3,000 K	no	yes	20 pc(s).	0.009 kg
STARK-SLE-PURE-G3-19-3000-840-CLA	89601807	4,000 K	no	yes	20 pc(s).	0.009 kg

Ordering data

Type	Article number	Colour temperature	Housing	Connection cable	Packaging, carton	Weight per pc.
STARK-SLE-PURE-G3-23-3000-830-CLA	**89601786**	3,000 K	no	yes	20 pc(s).	0.009 kg
STARK-SLE-PURE-G3-23-3000-840-CLA	**89601787**	4,000 K	no	yes	20 pc(s).	0.009 kg
STARK-SLE-PURE-G3-23-4000-830-CLA	**89601788**	3,000 K	no	yes	20 pc(s).	0.009 kg
STARK-SLE-PURE-G3-23-4000-840-CLA	**89601789**	4,000 K	no	yes	20 pc(s).	0.009 kg
STARK-SLE-PURE-G3-19-2000-830-CLA W/O-C	**89601794**	3,000 K	no	no	20 pc(s).	0.004 kg
STARK-SLE-PURE-G3-19-2000-840-CLA W/O-C	**89601795**	4,000 K	no	no	20 pc(s).	0.004 kg
STARK-SLE-PURE-G3-19-3000-830-CLA W/O-C	**89601808**	3,000 K	no	no	20 pc(s).	0.004 kg
STARK-SLE-PURE-G3-19-3000-840-CLA W/O-C	**89601809**	4,000 K	no	no	20 pc(s).	0.004 kg
STARK-SLE-PURE-G3-23-3000-830-CLA W/O-C	**89601796**	3,000 K	no	no	20 pc(s).	0.004 kg
STARK-SLE-PURE-G3-23-3000-840-CLA W/O-C	**89601797**	4,000 K	no	no	20 pc(s).	0.004 kg
STARK-SLE-PURE-G3-23-4000-830-CLA W/O-C	**89601798**	3,000 K	no	no	20 pc(s).	0.004 kg
STARK-SLE-PURE-G3-23-4000-840-CLA W/O-C	**89601799**	4,000 K	no	no	20 pc(s).	0.004 kg

Specific technical data

Type ②	Photo-metric code	Forward current ③ ④ ⑤	Luminous flux at tp = 25 °C ⑥	Luminous flux at tp = 65 °C ⑥	Power consumption module ⑦	Min. forward voltage module at tp = 65 °C	Max. forward voltage module at tp = 25 °C	Luminous efficacy module at tp = 25 °C	Luminous efficacy module at tp = 65 °C	Luminous efficacy system at tp = 65 °C ⑧	Colour rendering index CRI	Energy classifi-cation
STARK-SLE-19-2000 – Operating mode HE at 350 mA												
STARK-SLE-G3-19-2000-830-CLA	830/349	350 mA	1,400 lm	1,300 lm	11.9 W	32.9 V	37.2 V	118 lm/W	109 lm/W	98 lm/W	80	A+
STARK-SLE-G3-19-2000-840-CLA	840/349	350 mA	1,600 lm	1,500 lm	11.9 W	32.9 V	37.2 V	134 lm/W	126 lm/W	113 lm/W	80	A+
STARK-SLE-19-2000 – Operating mode BLO												
STARK-SLE-G3-19-2000-830-CLA	830/349	–	2,300 lm	2,000 lm	19.5 W	34.3 V	38.6 V	118 lm/W	103 lm/W	93 lm/W	80	A+
STARK-SLE-G3-19-2000-840-CLA	840/349	–	2,200 lm	2,000 lm	17.6 W	33.9 V	38.2 V	125 lm/W	114 lm/W	103 lm/W	80	A+
STARK-SLE-19-2000 – Operating mode HO at 1,050 mA												
STARK-SLE-G3-19-2000-830-CLA	830/349	1,050 mA	3,700 lm	3,250 lm	40.9 W	37.7 V	42.1 V	90 lm/W	79 lm/W	71 lm/W	80	A
STARK-SLE-G3-19-2000-840-CLA	840/349	1,050 mA	4,100 lm	3,750 lm	40.9 W	37.7 V	42.1 V	100 lm/W	92 lm/W	83 lm/W	80	A+
STARK-SLE-19-3000 – Operating mode HE at 350 mA												
STARK-SLE-G3-19-3000-830-CLA	830/349	350 mA	1,400 lm	1,300 lm	11.7 W	32.2 V	36.5 V	120 lm/W	111 lm/W	100 lm/W	80	A+
STARK-SLE-G3-19-3000-840-CLA	840/349	350 mA	1,600 lm	1,450 lm	11.7 W	32.2 V	36.5 V	137 lm/W	124 lm/W	112 lm/W	80	A+
STARK-SLE-19-3000 – Operating mode BLO												
STARK-SLE-G3-19-3000-830-CLA	830/349	–	3,350 lm	3,000 lm	32.5 W	34.9 V	39.2 V	103 lm/W	92 lm/W	83 lm/W	80	A+
STARK-SLE-G3-19-3000-840-CLA	840/349	–	3,350 lm	3,000 lm	28.5 W	34.4 V	38.7 V	118 lm/W	105 lm/W	95 lm/W	80	A+
STARK-SLE-19-3000 – Operating mode HO at 1,400 mA												
STARK-SLE-G3-19-3000-830-CLA	830/349	1,400 mA	4,750 lm	4,300 lm	54.0 W	37.4 V	41.8 V	88 lm/W	80 lm/W	72 lm/W	80	A
STARK-SLE-G3-19-3000-840-CLA	840/349	1,400 mA	5,300 lm	4,800 lm	54.0 W	37.4 V	41.8 V	98 lm/W	89 lm/W	80 lm/W	80	A+
STARK-SLE-23-3000 – Operating mode HE at 500 mA												
STARK-SLE-G3-23-3000-830-CLA	830/349	500 mA	2,050 lm	1,900 lm	16.9 W	32.6 V	36.9 V	121 lm/W	112 lm/W	101 lm/W	80	A+
STARK-SLE-G3-23-3000-840-CLA	840/349	500 mA	2,300 lm	2,100 lm	16.9 W	32.6 V	36.9 V	136 lm/W	124 lm/W	112 lm/W	80	A+
STARK-SLE-23-3000 – Operating mode BLO												
STARK-SLE-G3-23-3000-830-CLA	830/349	–	3,300 lm	3,000 lm	30.0 W	34.1 V	38.5 V	110 lm/W	100 lm/W	90 lm/W	80	A+
STARK-SLE-G3-23-3000-840-CLA	840/349	–	3,300 lm	3,000 lm	26.2 W	33.7 V	38.0 V	126 lm/W	115 lm/W	104 lm/W	80	A+
STARK-SLE-23-3000 – Operating mode HO at 1,400 mA												
STARK-SLE-G3-23-3000-830-CLA	830/349	1,400 mA	4,950 lm	4,450 lm	52.8 W	36.5 V	40.9 V	94 lm/W	84 lm/W	76 lm/W	80	A
STARK-SLE-G3-23-3000-840-CLA	840/349	1,400 mA	5,650 lm	5,100 lm	52.8 W	36.5 V	40.9 V	107 lm/W	97 lm/W	87 lm/W	80	A+
STARK-SLE-23-4000 – Operating mode HE at 700 mA												
STARK-SLE-G3-23-4000-830-CLA	830/349	700 mA	2,850 lm	2,600 lm	23.8 W	32.9 V	37.2 V	120 lm/W	109 lm/W	98 lm/W	80	A+
STARK-SLE-G3-23-4000-840-CLA	840/349	700 mA	3,150 lm	2,900 lm	23.8 W	32.9 V	37.2 V	132 lm/W	122 lm/W	110 lm/W	80	A+
STARK-SLE-23-4000 – Operating mode BLO												
STARK-SLE-G3-23-4000-830-CLA	830/349	–	4,400 lm	4,000 lm	41.0 W	34.4 V	38.8 V	107 lm/W	98 lm/W	88 lm/W	80	A+
STARK-SLE-G3-23-4000-840-CLA	840/349	–	4,350 lm	4,000 lm	35.0 W	33.9 V	38.2 V	124 lm/W	114 lm/W	103 lm/W	80	A+
STARK-SLE-23-4000 – Operating mode HO at 1,750 mA												
STARK-SLE-G3-23-4000-830-CLA	830/349	1,750 mA	6,250 lm	5,650 lm	66.0 W	36.5 V	40.9 V	95 lm/W	86 lm/W	77 lm/W	80	A
STARK-SLE-G3-23-4000-840-CLA	840/349	1,750 mA	6,900 lm	6,300 lm	66.0 W	36.5 V	40.9 V	105 lm/W	95 lm/W	86 lm/W	80	A+

① If the max. temperature limits are exceeded, the life of the module will be greatly reduced or the module may be damaged.
The temperature of the TALEX module at the tp point is to be measured in the thermally stable state with a temperature sensor or a temperature sensitive sticker according to EN 60598-1. For the precise position of the tp point see the above diagram.
② HE ... high efficiency, BLO ... best lamp operation, HO ... high output.
③ Exceeding the max. operating current leads to an overload on the TALEX module.
This may in turn result in a significant reduction in lifetime or even destruction of the TALEX module.
④ Max. permissible surge current: 3 A, duration max. 10 µs.
⑤ Max. permissible repetitive peak current for STARK-SLE-G3-19-2000 is 1,200 mA. Max. permissible repetitive peak current for STARK-SLE-G3-19-3000 is 1,680 mA.
Max. permissible repetitive peak current for STARK-SLE-G3-23-3000 is 1,920 mA. Max. permissible repetitive peak current for STARK-SLE-G3-23-4000 is 2,400 mA.
⑥ Tolerance range for optical data: ±10 %.
⑦ All values at tp = 65 °C.
⑧ Assumed efficiency for the LED control gear is 0.9.

NEW

TALEX(module STARK SLE GEN3 ART

STARK SLE

Product description

- For spotlights and downlights
- BLO operation mode: Best LED Operation for optimum operation and constant luminous flux at all colour temperatures in combination with Tridonic LED control gear of TOP and ECO series
- High colour consistency (MacAdam 2)
- Small LES (light emitting surface) diameter enables small beam angle for spotlights
- Excellent thermal management by COB technology
- Uniform radiation with Dam&Fill technology
- Fixing holes for M3 screws
- Built-in LED module
- Cooling required
- Flexible operating mode
- 5-year guarantee

→ For product data sheet go to www.tridonic.com, or available on request

Technical data

Beam characteristic	140°
Ambient temperature ta	-25 ... +50 °C
tp_rated temperature ①	65 °C
Max. tc point temperature ①	–
Risk group (EN 62471:2008)	1
Type of protection	IP00

→

For standards see data sheet

For colour temperatures and tolerances see data sheet

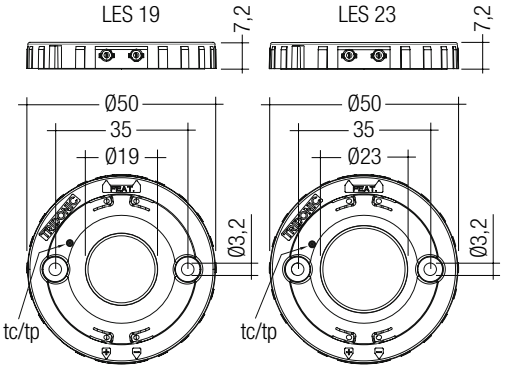

With housing (tc/tp position same as without housing) – Dimensions in mm

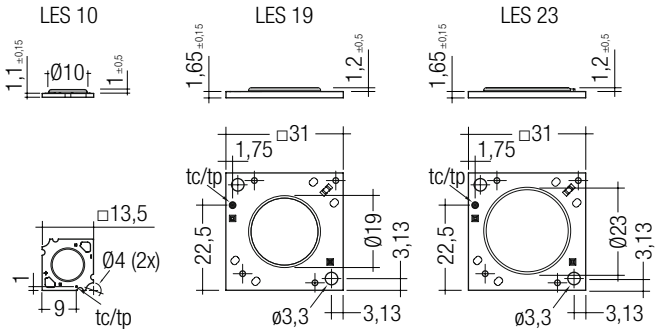

PURE (without housing) – Dimensions in mm

Ordering data

Type	Article number	Colour temperature	Housing	Connection cable	Packaging, carton	Weight per pc.
STARK-SLE-G3-19-930-ART	**89601763**	3,000 K	yes	no	15 pc(s).	0.009 kg
STARK-SLE-G3-23-930-ART	**89601765**	3,000 K	yes	no	15 pc(s).	0.009 kg
STARK-SLE-G3-PURE-10-930-ART t	**89601762**	3,000 K	no	yes	20 pc(s).	0.003 kg
STARK-SLE-G3-PURE-19-930-ART	**89601764**	3,000 K	no	yes	20 pc(s).	0.009 kg
STARK-SLE-G3-PURE-23-930-ART	**89601766**	3,000 K	no	yes	20 pc(s).	0.009 kg
STARK-SLE-G3-PURE-10-930-ART W/O-C	**89601761**	3,000 K	no	no	20 pc(s).	0.001 kg

Specific technical data

Type ②	Photometric code	Forward current ③ ④ ⑤	Luminous flux at tp = 25 °C ⑥	Luminous flux at tp = 65 °C ⑥	Power consumption module ⑦	Min. forward voltage module at tp = 65 °C	Max. forward voltage module at tp = 25 °C	Colour rendering index CRI	Energy classification
STARK-SLE-10 – Operating mode HE at 350 mA									
STARK-SLE-G3-PURE-10-930-ART	930/349	350 mA	480 lm	450 lm	6.1 W	16.7 V	18.9 V	98	A+
STARK-SLE-10 – Operating mode HO at 700 mA									
STARK-SLE-G3-PURE-10-930-ART	930/349	700 mA	880 lm	790 lm	13.2 W	18.3 V	20.4 V	98	A
STARK-SLE-19 – Operating mode HE at 350 mA									
STARK-SLE-G3-PURE-19-930-ART	930/349	350 mA	1,100 lm	1,020 lm	11.7 W	32.2 V	36.5 V	98	A+
STARK-SLE-19 – Operating mode BLO									
STARK-SLE-G3-PURE-19-930-ART	930/349	–	2,210 lm	2,000 lm	26.5 W	34.2 V	38.5 V	98	A
STARK-SLE-19 – Operating mode HO at 1,400 mA									
STARK-SLE-G3-PURE-19-930-ART	930/349	1,400 mA	3,740 lm	3,310 lm	54.0 W	37.4 V	41.8 V	98	B
STARK-SLE-23 – Operating mode HE at 700 mA									
STARK-SLE-G3-PURE-23-930-ART	930/349	700 mA	2,180 lm	1,990 lm	23.8 W	32.9 V	37.2 V	98	A
STARK-SLE-23 – Operating mode BLO									
STARK-SLE-G3-PURE-23-930-ART	930/349	–	3,300 lm	3,000 lm	41.0 W	34.4 V	38.8 V	98	A
STARK-SLE-23 – Operating mode HO at 1,750 mA									
STARK-SLE-G3-PURE-23-930-ART	930/349	1,750 mA	4,740 lm	4,160 lm	66.0 W	36.5 V	40.9 V	98	A

① If the max. temperature limits are exceeded, the life of the module will be greatly reduced or the module may be damaged.
The temperature of the TALEX module at the tp point is to be measured in the thermally stable state with a temperature sensor or a temperature sensitive sticker according to EN 60598-1. For the precise position of the tp point see the above diagram.
② HE ... high efficiency, BLO ... best lamp operation, HO ... high output.
③ Exceeding the max. operating current leads to an overload on the TALEX module.
This may in turn result in a significant reduction in lifetime or even destruction of the TALEX module.
④ Max. permissible surge current: 3 A, duration max. 10 µs.
⑤ Max. permissible repetitive peak current for STARK-SLE-G3-10-ART is 960 mA.
Max. permissible repetitive peak current for STARK-SLE-G3-19-ART is 1,680 mA.
Max. permissible repetitive peak current for STARK-SLE-G3-23-ART is 2,400 mA.
⑥ Tolerance range for optical data: ±10 %.
⑦ All values at tp = 65 °C.

NEW

TALEX(module STARK SLE GEN3 CLASSIC EM

STARK SLE

Product description

- Combined LED module for general and emergency lighting
- For spotlights and downlights
- High efficiency up to 136 lm/W for the LED module
- High system efficiency up to 113 lm/W at tp = 65 °C
- High colour consistency (MacAdam 3)
- Small LES (light emitting surface) diameter enables small beam angle for spotlights
- Excellent thermal management by COB technology
- Uniform radiation with Dam&Fill technology
- Fixing holes for M3 screws
- Built-in LED module
- Cooling required
- Flexible operating mode
- 5-year guarantee

→ For product data sheet go to www.tridonic.com, or available on request

Technical data

Beam characteristic	140°
Ambient temperature ta	-20 ... +50 °C
tp_rated temperature ①	65 °C
Max. tc point temperature ①	up to 90 °C
Risk group (EN 62471:2008)	1
Type of protection	IP00

→

For standards see data sheet

For colour temperatures and tolerances see data sheet

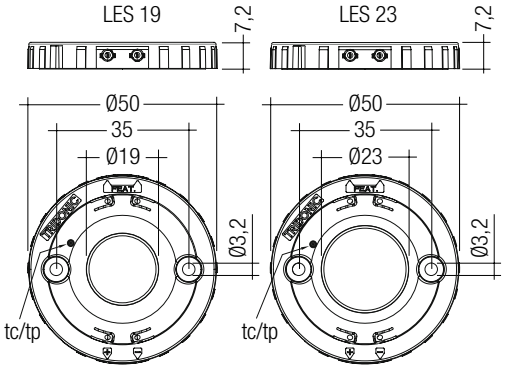

With housing (tc/tp position same as without housing) – Dimensions in mm

Ordering data

Type	Article number	Colour temperature	Housing	Connection cable	Packaging, carton	Weight per pc.
STARK-SLE-G3-19-2000-830-CLA-EM	89601868	3,000 K	yes	no	15 pc(s).	0.009 kg
STARK-SLE-G3-19-2000-840-CLA-EM	89601869	4,000 K	yes	no	15 pc(s).	0.017 kg
STARK-SLE-G3-23-3000-830-CLA-EM	89601870	3,000 K	yes	no	15 pc(s).	0.009 kg
STARK-SLE-G3-23-3000-840-CLA-EM	89601871	4,000 K	yes	no	15 pc(s).	0.014 kg

Specific technical data

Type ②	Photometric code	Forward current ③ ④ ⑤	Luminous flux at tp = 25 °C ⑥	Luminous flux at tp = 65 °C ⑥	Power consumption module ⑦	Forward voltage module ⑧ ⑨	Luminous efficacy module at tp = 25 °C	Luminous efficacy module at tp = 65 °C	Luminous efficacy system at tp = 65 °C ⑦	Colour rendering index CRI	Energy classification
STARK-SLE-19-2000 – Operating mode HE at 350 mA											
STARK-SLE-G3-19-2000-830-CLA-EM	830/349	350 mA	1,400 lm	1,300 lm	11.9 W	34.1 V	118 lm/W	109 lm/W	98 lm/W	80	A+
STARK-SLE-G3-19-2000-840-CLA-EM	840/349	350 mA	1,600 lm	1,500 lm	11.9 W	34.1 V	134 lm/W	126 lm/W	113 lm/W	80	A+
STARK-SLE-19-2000 – Operating mode HO at 1,050 mA											
STARK-SLE-G3-19-2000-830-CLA-EM	830/349	1,050 mA	3,700 lm	3,250 lm	40.9 W	38.9 V	90 lm/W	79 lm/W	71 lm/W	80	A
STARK-SLE-G3-19-2000-840-CLA-EM	840/349	1,050 mA	4,100 lm	3,750 lm	40.9 W	38.9 V	100 lm/W	92 lm/W	83 lm/W	80	A+
Emergency operation – 350 mA (EM powerLED 2 W)											
STARK-SLE-G3-19-2000-830-CLA-EM	830/349	350 mA	225 lm	–	–	5.9 V	–	–	–	–	–
STARK-SLE-G3-19-2000-840-CLA-EM	840/349	350 mA	240 lm	–	–	5.9 V	–	–	–	–	–
STARK-SLE-23-3000 – Operating mode HE at 500 mA											
STARK-SLE-G3-23-3000-830-CLA-EM	830/349	500 mA	2,050 lm	1,900 lm	16.9 W	33.8 V	121 lm/W	112 lm/W	101 lm/W	80	A+
STARK-SLE-G3-23-3000-840-CLA-EM	840/349	500 mA	2,300 lm	2,100 lm	16.9 W	33.8 V	136 lm/W	124 lm/W	112 lm/W	80	A+
STARK-SLE-23-3000 – Operating mode HO at 1,400 mA											
STARK-SLE-G3-23-3000-830-CLA-EM	830/349	1,400 mA	4,950 lm	4,450 lm	52.8 W	37.7 V	94 lm/W	84 lm/W	76 lm/W	80	A
STARK-SLE-G3-23-3000-840-CLA-EM	840/349	1,400 mA	5,650 lm	5,100 lm	52.8 W	37.7 V	107 lm/W	97 lm/W	87 lm/W	80	A+
Emergency operation – 700 mA (EM powerLED 4 W)											
STARK-SLE-G3-23-3000-830-CLA-EM	830/349	700 mA	420 lm	–	–	6.4 V	–	–	–	–	–
STARK-SLE-G3-23-3000-840-CLA-EM	840/349	700 mA	440 lm	–	–	6.4 V	–	–	–	–	–

① If the max. temperature limits are exceeded, the life of the module will be greatly reduced or the module may be damaged.
The temperature of the TALEX module at the tp point is to be measured in the thermally stable state with a temperature sensor or a temperature sensitive sticker according to EN 60598-1. For the precise position of the tp point see the above diagram.
② HE ... high efficiency, HO ... high output.
③ Exceeding the max. operating current leads to an overload on the TALEX module.
This may in turn result in a significant reduction in lifetime or even destruction of the TALEX module.
④ Max. permissible surge current: 3 A, duration max. 10 µs.
⑤ Max. permissible repetitive peak current for STARK-SLE-G3-19-2000 is 1,200 mA.
Max. permissible repetitive peak current for STARK-SLE-G3-23-3000 is 1,920 mA.
⑥ Tolerance range for optical data: ±10 %.
⑦ Assumed efficiency for the LED control gear is 0.9.
⑧ Tolerance range voltage: ±10 %.
⑨ All values at tp = 65 °C.

NEW

TALEXmodule STARK SLE GEN3 Mini SELECT

STARK SLE

Product description

- For spotlights and downlights
- High efficiency up to 114 lm/W for the LED module
- High system efficiency up to 95 lm/W at tp = 65 °C
- High colour consistency (MacAdam 3)
- Small LES (light emitting surface) diameter enables small beam angle for spotlights
- Excellent thermal management by COB technology
- Uniform radiation with Dam&Fill technology
- Built-in LED module
- Cooling required
- Flexible operating mode
- 5-year guarantee

→ For product data sheet go to www.tridonic.com, or available on request

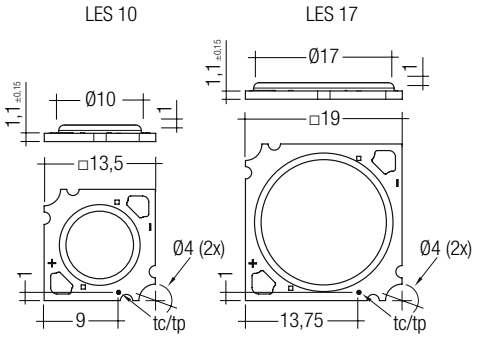

PURE (without housing) – Dimensions in mm

Technical data

Beam characteristic	140°
Ambient temperature ta	-25 ... +50 °C
tp_rated temperature ①	65 °C
Max. tc point temperature ①	up to 90 °C
Risk group (EN 62471:2008)	1
Type of protection	IP00

→

For standards see data sheet

For colour temperatures and tolerances see data sheet

Ordering data

Type	Article number	Colour temperature	Housing	Connection cable	Packaging, carton	Weight per pc.
STARK-SLE-PURE-G3-10-1000-930-SEL	**89601814**	3,000 K	no	yes	20 pc(s).	0.003 kg
STARK-SLE-PURE-G3-10-1000-940-SEL	**89601815**	4,000 K	no	yes	20 pc(s).	0.003 kg
STARK-SLE-PURE-G3-17-2000-930-SEL	**89601816**	3,000 K	no	yes	20 pc(s).	0.004 kg
STARK-SLE-PURE-G3-17-2000-940-SEL	**89601817**	4,000 K	no	yes	20 pc(s).	0.004 kg
STARK-SLE-PURE-G3-10-1000-930-SEL W/O-C	**89601824**	3,000 K	no	no	20 pc(s).	0.001 kg
STARK-SLE-PURE-G3-10-1000-940-SEL W/O-C	**89601825**	4,000 K	no	no	20 pc(s).	0.001 kg
STARK-SLE-PURE-G3-17-2000-930-SEL W/O-C	**89601826**	3,000 K	no	no	20 pc(s).	0.001 kg
STARK-SLE-PURE-G3-17-2000-940-SEL W/O-C	**89601827**	4,000 K	no	no	20 pc(s).	0.001 kg

Specific technical data

Type ②	Photometric code	Forward current ③ ④ ⑤	Luminous flux at tp = 25 °C ⑥	Luminous flux at tp = 65 °C ⑥	Power consumption module ⑦	Min. forward voltage module at tp = 65 °C	Max. forward voltage module at tp = 25 °C	Luminous efficacy module at tp = 25 °C	Luminous efficacy module at tp = 65 °C	Luminous efficacy system at tp = 65 °C ⑧	Colour rendering index CRI	Energy classification
STARK-SLE-10-1000 – Operating mode HE at 350 mA												
STARK-SLE-PURE-G3-10-1000-930-SEL	930/349	350 mA	560 lm	510 lm	6.1 W	16.7 V	18.9 V	92 lm/W	84 lm/W	75 lm/W	90	A+
STARK-SLE-PURE-G3-10-1000-940-SEL	940/349	350 mA	610 lm	560 lm	6.1 W	16.7 V	18.9 V	100 lm/W	92 lm/W	83 lm/W	90	A+
STARK-SLE-10-1000 – Operating mode HO at 700 mA												
STARK-SLE-PURE-G3-10-1000-930-SEL	930/349	700 mA	1,000 lm	880 lm	13.2 W	18.3 V	20.4 V	76 lm/W	67 lm/W	60 lm/W	90	A
STARK-SLE-PURE-G3-10-1000-940-SEL	940/349	700 mA	1,100 lm	1,000 lm	13.2 W	18.3 V	20.4 V	83 lm/W	76 lm/W	68 lm/W	90	A
STARK-SLE-17-2000 – Operating mode HE at 350 mA												
STARK-SLE-PURE-G3-17-2000-930-SEL	930/349	350 mA	1,200 lm	1,110 lm	11.9 W	32.9 V	37.2 V	101 lm/W	93 lm/W	84 lm/W	90	A+
STARK-SLE-PURE-G3-17-2000-940-SEL	940/349	350 mA	1,360 lm	1,250 lm	11.9 W	32.9 V	37.2 V	114 lm/W	105 lm/W	95 lm/W	90	A+
STARK-SLE-17-2000 – Operating mode HO at 1,050 mA												
STARK-SLE-PURE-G3-17-2000-930-SEL	930/349	1,050 mA	3,060 lm	2,800 lm	40.9 W	37.7 V	42.1 V	75 lm/W	68 lm/W	62 lm/W	90	A
STARK-SLE-PURE-G3-17-2000-940-SEL	940/349	1,050 mA	3,480 lm	3,170 lm	40.9 W	37.7 V	42.1 V	85 lm/W	78 lm/W	70 lm/W	90	A

① If the max. temperature limits are exceeded, the life of the module will be greatly reduced or the module may be damaged. The temperature of the TALEXmodule at the tp point is to be measured in the thermally stable state with a temperature sensor or a temperature sensitive sticker according to EN 60598-1. For the precise position of the tp point see the above diagram.
② HE ... high efficiency, HO ... high output.
③ Exceeding the max. operating current leads to an overload on the TALEXmodule. This may in turn result in a significant reduction in lifetime or even destruction of the TALEXmodule.
④ Max. permissible surge current: 3 A, duration max. 10 µs.
⑤ Max. permissible repetitive peak current for STARK-SLE-G3-10 is 960 mA. Max. permissible repetitive peak current for STARK-SLE-G3-17 is 1,200 mA.
⑥ Tolerance range for optical data: ±10 %.
⑦ All values at tp = 65 °C.
⑧ Assumed efficiency for the LED control gear is 0.9.

RoHS

NEW

TALEXmodule STARK SLE GEN3 Mini CLASSIC
STARK SLE

Product description

- For spotlights and downlights
- High efficiency up to 135 lm/W for the LED module
- High system efficiency up to 112 lm/W at tp = 65 °C
- High colour consistency (MacAdam 3)
- Small LES (light emitting surface) diameter enables small beam angle for spotlights
- Excellent thermal management by COB technology
- Uniform radiation with Dam&Fill technology
- Built-in LED module
- Cooling required
- Flexible operating mode
- 5-year guarantee

→ For product data sheet go to www.tridonic.com, or available on request

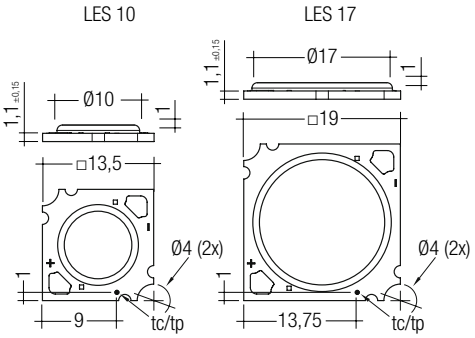

PURE (without housing) – Dimensions in mm

Technical data

Beam characteristic	140°
Ambient temperature ta	-25 ... +50 °C
tp_rated temperature ①	65 °C
Risk group (EN 62471:2008)	1
Type of protection	IP00

→

For standards see data sheet

For colour temperatures and tolerances see data sheet

Ordering data

Type	Article number	Colour temperature	Housing	Connection cable	Packaging, carton	Weight per pc.
STARK-SLE-PURE-G3-10-1000-830-CLA	89601780	3,000 K	no	yes	20 pc(s).	0.003 kg
STARK-SLE-PURE-G3-10-1000-840-CLA	89601781	4,000 K	no	yes	20 pc(s).	0.003 kg
STARK-SLE-PURE-G3-17-2000-830-CLA	89601782	3,000 K	no	yes	20 pc(s).	0.004 kg
STARK-SLE-PURE-G3-17-2000-840-CLA	89601783	4,000 K	no	yes	20 pc(s).	0.004 kg
STARK-SLE-PURE-G3-10-1000-830-CLA W/O-C	89601790	3,000 K	no	no	20 pc(s).	0.001 kg
STARK-SLE-PURE-G3-10-1000-840-CLA W/O-C	89601791	4,000 K	no	no	20 pc(s).	0.001 kg
STARK-SLE-PURE-G3-17-2000-830-CLA W/O-C	89601792	3,000 K	no	no	20 pc(s).	0.001 kg
STARK-SLE-PURE-G3-17-2000-840-CLA W/O-C	89601793	4,000 K	no	no	20 pc(s).	0.001 kg

Specific technical data

Type ②	Photometric code	Forward current ③ ④ ⑤	Luminous flux at tp = 25 °C ⑥	Luminous flux at tp = 65 °C ⑥	Power consumption module ⑦	Min. forward voltage module at tp = 65 °C	Max. forward voltage module at tp = 25 °C	Luminous efficacy module at tp = 25 °C	Luminous efficacy module at tp = 65 °C	Luminous efficacy system at tp = 65 °C ⑧	Colour rendering index CRI	Energy classification
STARK-SLE-10-1000 – Operating mode HE at 350 mA												
STARK-SLE-PURE-G3-10-1000-830-CLA	830/349	350 mA	660 lm	610 lm	6.1 W	16.7 V	18.9 V	108 lm/W	100 lm/W	90 lm/W	80	A+
STARK-SLE-PURE-G3-10-1000-840-CLA	840/349	350 mA	720 lm	660 lm	6.1 W	16.7 V	18.9 V	118 lm/W	108 lm/W	97 lm/W	80	A+
STARK-SLE-10-1000 – Operating mode HO at 700 mA												
STARK-SLE-PURE-G3-10-1000-830-CLA	830/349	700 mA	1,200 lm	1,080 lm	13.2 W	18.3 V	20.4 V	91 lm/W	82 lm/W	74 lm/W	80	A
STARK-SLE-PURE-G3-10-1000-840-CLA	840/349	700 mA	1,300 lm	1,150 lm	13.2 W	18.3 V	20.4 V	98 lm/W	87 lm/W	78 lm/W	80	A+
STARK-SLE-17-2000 – Operating mode HE at 350 mA												
STARK-SLE-PURE-G3-17-2000-830-CLA	830/349	350 mA	1,420 lm	1,310 lm	11.9 W	32.9 V	37.2 V	119 lm/W	110 lm/W	99 lm/W	80	A+
STARK-SLE-PURE-G3-17-2000-840-CLA	840/349	350 mA	1,610 lm	1,480 lm	11.9 W	32.9 V	37.2 V	135 lm/W	124 lm/W	112 lm/W	80	A+
STARK-SLE-17-2000 – Operating mode HO at 1,050 mA												
STARK-SLE-PURE-G3-17-2000-830-CLA	830/349	1,050 mA	3,680 lm	3,260 lm	40.9 W	37.7 V	42.1 V	90 lm/W	80 lm/W	72 lm/W	80	A
STARK-SLE-PURE-G3-17-2000-840-CLA	840/349	1,050 mA	4,100 lm	3,730 lm	40.9 W	37.7 V	42.1 V	100 lm/W	91 lm/W	82 lm/W	80	A+

① If the max. temperature limits are exceeded, the life of the module will be greatly reduced or the module may be damaged. The temperature of the TALEXmodule at the tp point is to be measured in the thermally stable state with a temperature sensor or a temperature sensitive sticker according to EN 60598-1. For the precise position of the tp point see the above diagram.
② HE ... high efficiency, HO ... high output.
③ Exceeding the max. operating current leads to an overload on the TALEXmodule. This may in turn result in a significant reduction in lifetime or even destruction of the TALEXmodule.
④ Max. permissible surge current: 3 A, duration max. 10 µs.
⑤ Ripple max. 35 % of typ. forward current.
⑥ Tolerance range for optical data: ±10 %.
⑦ All values at tp = 65 °C.
⑧ Assumed efficiency for the LED control gear is 0.9.

TALEX(module STARK CLE CLASSIC EM

STARK CLE

Product description

- Ideal for ceiling-mounted and wallmounted luminaires
- LED system solution consisting of the LED module, the control gear with integrated emergency function and SWITCH sensor
- Based on annular and TC-DD fluorescent lamps
- Efficiency of the module up to 136 lm/W
- SO version is compatible with SWITCH Sensor HF 5BP – simple CORRIDOR FUNCTION in combination with EMpowerLED 15 W
- Integrated separate emergency LEDs controlled by EM powerLED
- High colour rendering index CRI > 80
- Small colour tolerance MacAdam 3 ①
- Small luminous flux tolerances
- Colour temperatures 3,000 and 4,000 K
- Self-cooling (no additional heat sink required
- Push terminals for quick and simple wiring
- Simple installation (e.g. screws
- Long lifetime: 50,000 hours
- 5-year system guarantee on the complete product

→ For product data sheet go to www.tridonic.com, or available on request

Technical data

Beam characteristic	120°
Ambient temperature ta	-30 ... +45 °C
Typ. tp point	65 °C
Risk group (EN 62471:2008)	0
Type of protection	IP00

→

For standards see data sheet

For colour temperatures and tolerances see data sheet

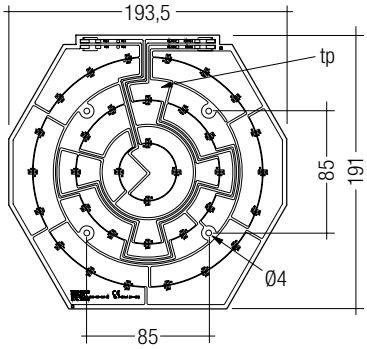

STARK-CLE-220-EM

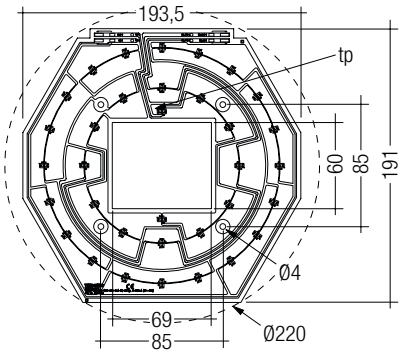

STARK-CLE-220-EM-SO

Ordering data

Type	Article number	Colour temperature	Packaging, carton	Weight per pc.
STARK-CLE-220-1500-830-CLA-EM	**28000106**	3,000 K	160 pc(s).	0.060 kg
STARK-CLE-220-1500-840-CLA-EM	**28000107**	4,000 K	160 pc(s).	0.060 kg
STARK-CLE-220-1500-830-CLA-EM-SO	**28000108**	3,000 K	160 pc(s).	0.053 kg
STARK-CLE-220-1500-840-CLA-EM-SO	**28000109**	4,000 K	160 pc(s).	0.053 kg

Specific technical data

Type ②	Photo-metric code	Typ. luminous flux at tp = 25 °C ③	Typ. luminous flux at tp = 65 °C ③	Typ. forward current ③ ④ ⑤	Typ. forward voltage	Typ. power consump-tion ③	Luminous efficacy module at tp = 25 °C	Luminous efficacy module at tp = 65 °C	Luminous efficacy system at tp = 65 °C	Colour rendering index CRI	Energy classifi-cation
Operating mode HE at 350 mA											
STARK-CLE-220-1500-830-CLA-EM	830/3x9	1,350 lm	1,300 lm	350 mA	29.50 V	10.3 W	131 lm/W	126 lm/W	107 lm/W	> 80	A+
STARK-CLE-220-1500-840-CLA-EM	840/3x9	1,400 lm	1,350 lm	350 mA	29.50 V	10.3 W	136 lm/W	131 lm/W	111 lm/W	> 80	A+
STARK-CLE-220-1500-830-CLA-EM-SO	830/3x9	1,350 lm	1,300 lm	350 mA	29.50 V	10.3 W	131 lm/W	126 lm/W	107 lm/W	> 80	A+
STARK-CLE-220-1500-840-CLA-EM-SO	840/3x9	1,400 lm	1,350 lm	350 mA	29.50 V	10.3 W	136 lm/W	131 lm/W	111 lm/W	> 80	A+
Operating mode HO at 470 mA											
STARK-CLE-220-1500-830-CLA-EM	830/3x9	1,750 lm	1,650 lm	470 mA	30.50 V	14.3 W	122 lm/W	115 lm/W	98 lm/W	> 80	A+
STARK-CLE-220-1500-840-CLA-EM	840/3x9	1,800 lm	1,700 lm	470 mA	30.50 V	14.3 W	126 lm/W	119 lm/W	101 lm/W	> 80	A+
STARK-CLE-220-1500-830-CLA-EM-SO	830/3x9	1,750 lm	1,650 lm	470 mA	30.50 V	14.3 W	122 lm/W	115 lm/W	98 lm/W	> 80	A+
STARK-CLE-220-1500-840-CLA-EM-SO	840/3x9	1,800 lm	1,700 lm	470 mA	30.50 V	14.3 W	126 lm/W	119 lm/W	101 lm/W	> 80	A+
Operating mode HO at 500 mA											
STARK-CLE-220-1500-830-CLA-EM	830/3x9	1,800 lm	1,750 lm	500 mA	30.50 V	15.3 W	118 lm/W	114 lm/W	97 lm/W	> 80	A+
STARK-CLE-220-1500-840-CLA-EM	840/3x9	1,900 lm	1,800 lm	500 mA	30.50 V	15.3 W	124 lm/W	118 lm/W	100 lm/W	> 80	A+
STARK-CLE-220-1500-830-CLA-EM-SO	830/3x9	1,800 lm	1,750 lm	500 mA	30.50 V	15.3 W	118 lm/W	114 lm/W	97 lm/W	> 80	A+
STARK-CLE-220-1500-840-CLA-EM-SO	840/3x9	1,900 lm	1,800 lm	500 mA	30.50 V	15.3 W	124 lm/W	118 lm/W	100 lm/W	> 80	A+
Emergency mode at 320 mA (EM powerLED NM 1 W BASIC, EM powerLED 15 W BASIC CLE NiCd)											
STARK-CLE-220-1500-830-CLA-EM	830/3x9	125 lm	120 lm	320 mA	2.95 V	–	–	–	–	–	–
STARK-CLE-220-1500-840-CLA-EM	840/3x9	130 lm	125 lm	320 mA	2.95 V	–	–	–	–	–	–
STARK-CLE-220-1500-830-CLA-EM-SO	830/3x9	125 lm	120 lm	320 mA	2.95 V	–	–	–	–	–	–
STARK-CLE-220-1500-840-CLA-EM-SO	840/3x9	130 lm	125 lm	320 mA	2.95 V	–	–	–	–	–	–
Emergency mode at 350 mA (EM powerLED 1 W)											
STARK-CLE-220-1500-830-CLA-EM	830/3x9	135 lm	130 lm	350 mA	2.95 V	–	–	–	–	–	–
STARK-CLE-220-1500-840-CLA-EM	840/3x9	140 lm	135 lm	350 mA	2.95 V	–	–	–	–	–	–
STARK-CLE-220-1500-830-CLA-EM-SO	830/3x9	135 lm	130 lm	350 mA	2.95 V	–	–	–	–	–	–
STARK-CLE-220-1500-840-CLA-EM-SO	840/3x9	140 lm	135 lm	350 mA	2.95 V	–	–	–	–	–	–
Emergency mode at 400 mA (EM powerLED 15 W BASIC CLE NiMH)											
STARK-CLE-220-1500-830-CLA-EM	830/3x9	150 lm	145 lm	400 mA	3.00 V	–	–	–	–	–	–
STARK-CLE-220-1500-840-CLA-EM	840/3x9	160 lm	150 lm	400 mA	3.00 V	–	–	–	–	–	–
STARK-CLE-220-1500-830-CLA-EM-SO	830/3x9	150 lm	145 lm	400 mA	3.00 V	–	–	–	–	–	–
STARK-CLE-220-1500-840-CLA-EM-SO	840/3x9	160 lm	150 lm	400 mA	3.00 V	–	–	–	–	–	–
Emergency mode at 600 mA (EM powerLED 2 W)											
STARK-CLE-220-1500-830-CLA-EM	830/3x9	220 lm	210 lm	600 mA	3.10 V	–	–	–	–	–	–
STARK-CLE-220-1500-840-CLA-EM	840/3x9	230 lm	220 lm	600 mA	3.10 V	–	–	–	–	–	–
STARK-CLE-220-1500-830-CLA-EM-SO	830/3x9	220 lm	210 lm	600 mA	3.10 V	–	–	–	–	–	–
STARK-CLE-220-1500-840-CLA-EM-SO	840/3x9	230 lm	220 lm	600 mA	3.10 V	–	–	–	–	–	–

① Integrated measurement over the whole module.
② HE ... high efficiency, HO ... high output.
③ Tolerance range for optical and electrical data: ±10 %.
④ Max. permissible repetitive peak current: 720 mA
⑤ Max. permissible surge current: 1.5 A, duration max. 10 µs.

NEW

TALEX(module STARK CLE 160-2200 CLASSIC

STARK CLE

Product description

- Ideal for ceiling-mounted and wallmounted luminaires
- Efficiency of the module up to 125 lm/W
- Small colour tolerance MacAdam 4 ①
- Small luminous flux tolerances
- Colour temperatures 3,000 and 4,000 K
- Self-cooling (no additional heat sink required)
- Push terminals for quick and simple wiring
- Simple installation (e.g. screws)
- Long lifetime: 50,000 hours
- 5-year guarantee

→ For product data sheet go to www.tridonic.com, or available on request

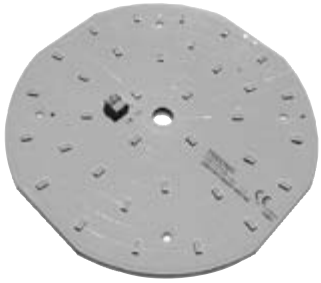

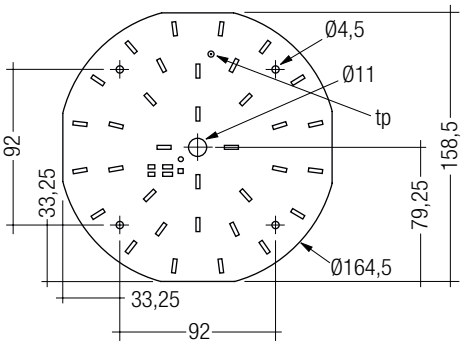

Technical data

Beam characteristic	120°
Ambient temperature ta	-30 ... +50 °C
Typ. tp point	65 °C
Risk group (EN 62471:2008)	0
Type of protection	IP00

→

For standards see data sheet

For colour temperatures and tolerances see data sheet

Ordering data

Type	Article number	Colour temperature	Packaging, carton	Weight per pc.
STARK-CLE-160-2200-830-CLA	**89601846**	3,000 K	50 pc(s).	0.074 kg
STARK-CLE-160-2200-840-CLA	**89601847**	4,000 K	50 pc(s).	0.074 kg

Specific technical data

Type	Photometric code	Typ. luminous flux at tp = 25 °C ②	Typ. luminous flux at tp = 65 °C ②	Typ. forward current ② ③ ④	Typ. forward voltage	Typ. power consumption ②	Luminous efficacy module at tp = 25 °C	Luminous efficacy module at tp = 65 °C	Luminous efficacy system at tp = 65 °C	Colour rendering index CRI	Energy classification
Operating mode at 350 mA											
STARK-CLE-160-2200-830-CLA	830/4xx	2,130 lm	2,050 lm	350 mA	51.4 V	18 W	118 lm/W	114 lm/W	97 lm/W	> 80	A+
STARK-CLE-160-2200-840-CLA	840/4xx	2,280 lm	2,190 lm	350 mA	51.4 V	18 W	127 lm/W	122 lm/W	104 lm/W	> 80	A+

① Integrated measurement over the whole module.
② Tolerance range for optical and electrical data: ±10 %.
③ Max. permissible repetitive peak current: 480 mA.
④ Max. permissible surge current: 0.54 A, duration max. 10 ms.

NEW

TALEXmodule STARK CLE 315-4000 CLASSIC EM

STARK CLE

Product description

- Ideal for ceiling-mounted and wallmounted luminaires
- Based on annular and compact fluorescent lamps
- Efficiency of the module up to 127 lm/W
- SO version is compatible with SWITCH Sensor HF 5BP
- Integrated separate emergency LEDs controlled by EM powerLED
- High colour rendering index CRI > 80
- Small colour tolerance MacAdam 3 ①
- Small luminous flux tolerances
- Colour temperatures 3,000 and 4,000 K
- Self-cooling (no additional heat sink required)
- Push terminals for quick and simple wiring
- Simple installation (e.g. screws)
- Long lifetime: 50,000 hours
- 5-year guarantee

→ For product data sheet go to www.tridonic.com, or available on request

Technical data

Beam characteristic	120°
Ambient temperature ta	-30 ... +35 °C
Typ. tp point	65 °C
Risk group (EN 62471:2008)	0
Type of protection	IP00

→

For standards see data sheet

For colour temperatures and tolerances see data sheet

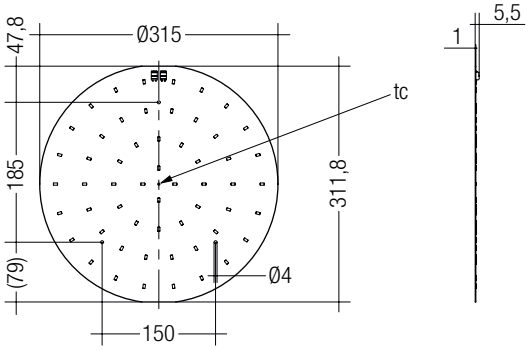

STARK-CLE-315-EM

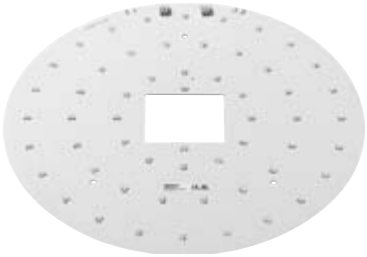

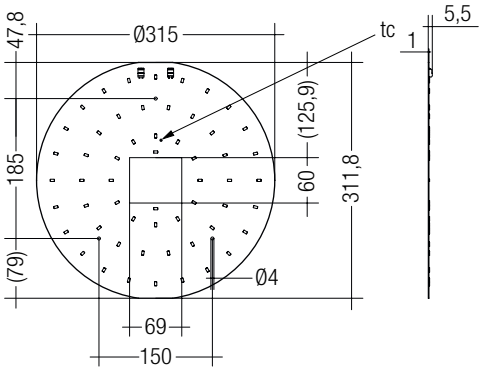

STARK-CLE-315-EM-SO

Ordering data

Type	Article number	Colour temperature	Packaging, carton	Weight per pc.
STARK-CLE-315-4000-830-CLA-EM	28000303	3,000 K	40 pc(s).	0.160 kg
STARK-CLE-315-4000-840-CLA-EM	28000304	4,000 K	40 pc(s).	0.160 kg
STARK-CLE-315-4000-830-CLA-EM-SO	28000305	3,000 K	40 pc(s).	0.153 kg
STARK-CLE-315-4000-840-CLA-EM-SO	28000306	4,000 K	40 pc(s).	0.153 kg

Specific technical data

Type②	Photometric code	Typ. luminous flux at tp = 25 °C③	Typ. luminous flux at tp = 65 °C③	Typ. forward current ③④⑤	Typ. forward voltage	Typ. power consumption③	Luminous efficacy module at tp = 25 °C	Luminous efficacy module at tp = 65 °C	Luminous efficacy system at tp = 65 °C	Colour rendering index CRI	Energy classification
Operating mode HE at 700 mA											
STARK-CLE-315-4000-830-CLA-EM	830/3x9	2,600 lm	2,500 lm	700 mA	31.0 V	21.7 W	120 lm/W	115 lm/W	104 lm/W	> 80	A+
STARK-CLE-315-4000-840-CLA-EM	840/3x9	2,750 lm	2,650 lm	700 mA	31.0 V	21.7 W	127 lm/W	122 lm/W	110 lm/W	> 80	A++
STARK-CLE-315-4000-830-CLA-EM-SO	830/3x9	2,600 lm	2,500 lm	700 mA	31.0 V	21.7 W	120 lm/W	115 lm/W	104 lm/W	> 80	A+
STARK-CLE-315-4000-840-CLA-EM-SO	840/3x9	2,750 lm	2,650 lm	700 mA	31.0 V	21.7 W	127 lm/W	122 lm/W	110 lm/W	> 80	A++
Operating mode HO at 1,050 mA											
STARK-CLE-315-4000-830-CLA-EM	830/3x9	3,750 lm	3,600 lm	1,050 mA	32.5 V	34.1 W	110 lm/W	106 lm/W	95 lm/W	> 80	A+
STARK-CLE-315-4000-840-CLA-EM	840/3x9	3,900 lm	3,750 lm	1,050 mA	32.5 V	34.1 W	114 lm/W	110 lm/W	99 lm/W	> 80	A+
STARK-CLE-315-4000-830-CLA-EM-SO	830/3x9	3,750 lm	3,600 lm	1,050 mA	32.5 V	34.1 W	110 lm/W	106 lm/W	95 lm/W	> 80	A+
STARK-CLE-315-4000-840-CLA-EM-SO	840/3x9	3,900 lm	3,750 lm	1,050 mA	32.5 V	34.1 W	114 lm/W	110 lm/W	99 lm/W	> 80	A+
Emergency operation at 600 mA (EM powerLED 2 W)											
STARK-CLE-315-4000-830-CLA-EM	830/3x9	240 lm	235 lm	600 mA	3.1 V	–	–	–	–	–	–
STARK-CLE-315-4000-840-CLA-EM	840/3x9	250 lm	240 lm	600 mA	3.1 V	–	–	–	–	–	–
STARK-CLE-315-4000-830-CLA-EM-SO	830/3x9	240 lm	235 lm	600 mA	3.1 V	–	–	–	–	–	–
STARK-CLE-315-4000-840-CLA-EM-SO	840/3x9	250 lm	240 lm	600 mA	3.1 V	–	–	–	–	–	–
Emergency operation at 1,000 mA (EM powerLED 4 W)											
STARK-CLE-315-4000-830-CLA-EM	830/3x9	370 lm	355 lm	1,000 mA	3.2 V	–	–	–	–	–	–
STARK-CLE-315-4000-840-CLA-EM	840/3x9	385 lm	365 lm	1,000 mA	3.2 V	–	–	–	–	–	–
STARK-CLE-315-4000-830-CLA-EM-SO	830/3x9	370 lm	355 lm	1,000 mA	3.2 V	–	–	–	–	–	–
STARK-CLE-315-4000-840-CLA-EM-SO	840/3x9	385 lm	365 lm	1,000 mA	3.2 V	–	–	–	–	–	–

① Central measurement over the whole module.
② HE ... high efficiency, HO ... high output.
③ Tolerance range for optical and electrical data: ±10 %.
④ Max. permissible repetitive peak current: 1,200 mA.
⑤ Max. permissible surge current: 2.5 A, duration max. 10 µs.

TALEXmodule STARK CLE 360 CLASSIC EM

STARK CLE

Product description

- Ideal for ceiling-mounted and wallmounted luminaires
- Based on annular and compact fluorescent lamps
- Efficiency of the module up to 127 lm/W
- SO version is compatible with SWITCH Sensor HF 5BP
- Integrated separate emergency LEDs controlled by EM powerLED
- High colour rendering index CRI > 80
- Small colour tolerance MacAdam 3 ①
- Small luminous flux tolerances
- Colour temperatures 3,000 and 4,000 K
- Self-cooling (no additional heat sink required)
- Push terminals for quick and simple wiring
- Simple installation (e.g. screws)
- Long lifetime: 50,000 hours
- 5-year guarantee

→ For product data sheet go to www.tridonic.com, or available on request

Technical data

Beam characteristic	120°
Ambient temperature ta	-30 ... +35 °C
Typ. tp point	65 °C
Risk group (EN 62471:2008)	0
Type of protection	IP00

→

For standards see data sheet

For colour temperatures and tolerances see data sheet

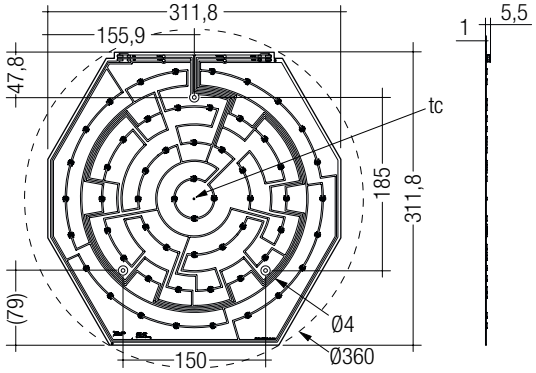

STARK-CLE-360-EM

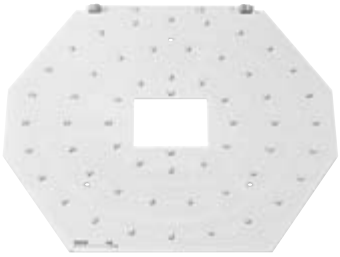

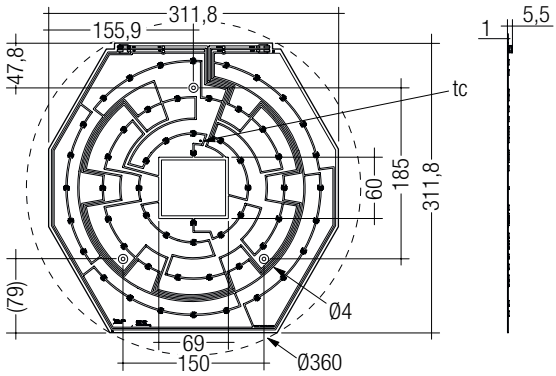

STARK-CLE-360-EM-SO

Ordering data

Type	Article number	Colour temperature	Packaging, carton	Weight per pc.
STARK-CLE-360-4000-830-CLA-EM	**28000114**	3,000 K	40 pc(s).	0.160 kg
STARK-CLE-360-4000-840-CLA-EM	**28000115**	4,000 K	40 pc(s).	0.160 kg
STARK-CLE-360-4000-830-CLA-EM-SO	**28000116**	3,000 K	40 pc(s).	0.153 kg
STARK-CLE-360-4000-840-CLA-EM-SO	**28000117**	4,000 K	40 pc(s).	0.153 kg

Specific technical data

Type ②	Photometric code	Typ. luminous flux at tp = 25 °C ③	Typ. luminous flux at tp = 65 °C ③	Typ. forward current ③ ④ ⑤	Typ. forward voltage	Typ. power consumption ③	Luminous efficacy module at tp = 25 °C	Luminous efficacy module at tp = 65 °C	Luminous efficacy system at tp = 65 °C	Colour rendering index CRI	Energy classification
Operating mode HE at 700 mA											
STARK-CLE-360-4000-830-CLA-EM	830/3x9	2,600 lm	2,500 lm	700 mA	31.0 V	21.7 W	120 lm/W	115 lm/W	104 lm/W	> 80	A+
STARK-CLE-360-4000-840-CLA-EM	840/3x9	2,750 lm	2,650 lm	700 mA	31.0 V	21.7 W	127 lm/W	122 lm/W	110 lm/W	> 80	A+
STARK-CLE-360-4000-830-CLA-EM-SO	830/3x9	2,600 lm	2,500 lm	700 mA	31.0 V	21.7 W	120 lm/W	115 lm/W	104 lm/W	> 80	A+
STARK-CLE-360-4000-840-CLA-EM-SO	840/3x9	2,750 lm	2,650 lm	700 mA	31.0 V	21.7 W	127 lm/W	122 lm/W	110 lm/W	> 80	A+
Operating mode HO at 1,050 mA											
STARK-CLE-360-4000-830-CLA-EM	830/3x9	3,750 lm	3,600 lm	1,050 mA	32.5 V	34.1 W	110 lm/W	106 lm/W	95 lm/W	> 80	A+
STARK-CLE-360-4000-840-CLA-EM	840/3x9	3,900 lm	3,750 lm	1,050 mA	32.5 V	34.1 W	114 lm/W	110 lm/W	99 lm/W	> 80	A+
STARK-CLE-360-4000-830-CLA-EM-SO	830/3x9	3,750 lm	3,600 lm	1,050 mA	32.5 V	34.1 W	110 lm/W	106 lm/W	95 lm/W	> 80	A+
STARK-CLE-360-4000-840-CLA-EM-SO	840/3x9	3,900 lm	3,750 lm	1,050 mA	32.5 V	34.1 W	114 lm/W	110 lm/W	99 lm/W	> 80	A+
Emergency operation at 600 mA (EM powerLED 2 W)											
STARK-CLE-360-4000-830-CLA-EM	830/3x9	240 lm	235 lm	600 mA	3.1 V	–	–	–	–	–	–
STARK-CLE-360-4000-840-CLA-EM	840/3x9	250 lm	240 lm	600 mA	3.1 V	–	–	–	–	–	–
STARK-CLE-360-4000-830-CLA-EM-SO	830/3x9	240 lm	235 lm	600 mA	3.1 V	–	–	–	–	–	–
STARK-CLE-360-4000-840-CLA-EM-SO	840/3x9	250 lm	240 lm	600 mA	3.1 V	–	–	–	–	–	–
Emergency operation at 1,000 mA (EM powerLED 4 W)											
STARK-CLE-360-4000-830-CLA-EM	830/3x9	370 lm	355 lm	1,000 mA	3.2 V	–	–	–	–	–	–
STARK-CLE-360-4000-840-CLA-EM	840/3x9	385 lm	365 lm	1,000 mA	3.2 V	–	–	–	–	–	–
STARK-CLE-360-4000-830-CLA-EM-SO	830/3x9	370 lm	355 lm	1,000 mA	3.2 V	–	–	–	–	–	–
STARK-CLE-360-4000-840-CLA-EM-SO	840/3x9	385 lm	365 lm	1,000 mA	3.2 V	–	–	–	–	–	–

① Central measurement over the whole module.
② HE ... high efficiency, HO ... high output.
③ Tolerance range for optical and electrical data: ±10 %.
④ Max. permissible repetitive peak current: 1,200 mA.
⑤ Max. permissible surge current: 2.5 A, duration max. 10 µs.

RoHS

NEW

TALEXmodule STARK FLE GEN1

STARK FLE

Product description

- For spotlights
- High efficiency up to 137 lm/W for the LED module
- High colour consistency (MacAdams 3)
- Excellent thermal management by COB technology
- Uniform radiation with Dam&Fill technology
- Fixing holes for M3 screws
- Built-in LED module
- Cooling required
- Flexible operating modes

→ For product data sheet go to www.tridonic.com, or available on request

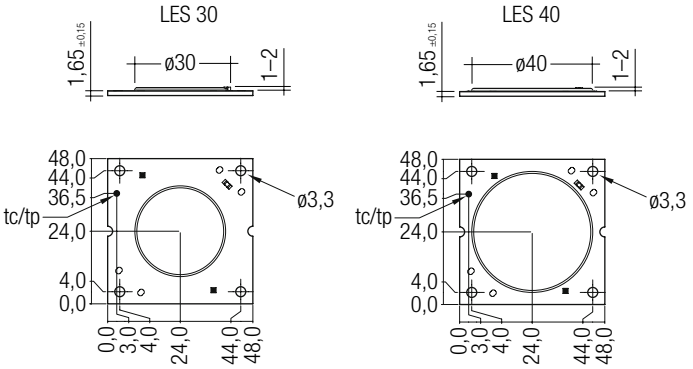

Technical data

Beam characteristic	140°
Ambient temperature ta	-20 ... +50 °C
tp_rated temperature ①	65 °C
Risk group (EN 62471:2008)	1
Type of protection	IP00

→

For standards see data sheet

For colour temperatures and tolerances see data sheet

Ordering data

Type	Article number	Colour temperature	Packaging	Weight per pc.
STARK-FLE-G1-LES30-830-CLA	**89601873**	3,000 K	tbd pc(s).	tbd kg
STARK-FLE-G1-LES30-840-CLA	**89601874**	4,000 K	tbd pc(s).	tbd kg
STARK-FLE-G1-LES30-765-IND	**89601875**	6,500 K	tbd pc(s).	tbd kg
STARK-FLE-G1-LES40-830-CLA	**89601876**	3,000 K	tbd pc(s).	tbd kg
STARK-FLE-G1-LES40-840-CLA	**89601877**	4,000 K	tbd pc(s).	tbd kg
STARK-FLE-G1-LES40-765-IND	**89601878**	6,500 K	tbd pc(s).	tbd kg

Specific technical data

Type	Photo-metric code	Forward current ③ ④ ⑤	Luminous flux at tp = 25 °C②	Luminous flux at tp = 65 °C②	Power consumption module⑦	Min. forward voltage module at tp = 65 °C	Max. forward voltage module at tp = 25 °C	Luminous efficacy module at tp = 25 °C	Luminous efficacy module at tp = 65 °C	Luminous efficacy system at tp = 65 °C⑥	Colour rendering index CRI	Energy classifi-cation
STARK-FLE-LES30 – Operating mode at 1,750 mA												
STARK-FLE-G1-LES30-830-CLA	830/349	1,750 mA	10,080 lm	8,730 lm	93.5 W	51.8 V	57.9 V	108 lm/W	93 lm/W	84 lm/W	80	A+
STARK-FLE-G1-LES30-840-CLA	840/349	1,750 mA	11,200 lm	9,700 lm	93.5 W	51.8 V	57.9 V	120 lm/W	104 lm/W	93 lm/W	80	A+
STARK-FLE-G1-LES30-765-IND	765/349	1,750 mA	11,970 lm	10,740 lm	93.5 W	51.8 V	57.9 V	128 lm/W	115 lm/W	103 lm/W	80	A+
STARK-FLE-LES40 – Operating mode at 3,500 mA												
STARK-FLE-G1-LES40-830-CLA	830/349	3,500 mA	20,160 lm	17,460 lm	175.0 W	48.3 V	54.2 V	115 lm/W	100 lm/W	90 lm/W	80	A+
STARK-FLE-G1-LES40-840-CLA	840/349	3,500 mA	22,400 lm	19,400 lm	175.0 W	48.3 V	54.2 V	128 lm/W	111 lm/W	100 lm/W	80	A+
STARK-FLE-G1-LES40-765-IND	765/349	3,500 mA	23,950 lm	21,480 lm	175.0 W	48.3 V	54.2 V	137 lm/W	123 lm/W	110 lm/W	80	A++

① If the max. temperature limits are exceeded, the life of the system will be greatly reduced or the system may be damaged. The temperature of the TALEXmodule at the tp-point is to be measured in the thermally stable state with a temperature sensor or or temperature-sensitive sticker as per EN 60598-1. For the precise position of the tp point see the drawing above.

② Tolerance range for optical data: ±10 %.

③ Exceeding the max. operating current leads to an overload on the TALEXmodule. This may in turn result in a significant reduction in lifetime or even destruction of the TALEXmodule.

④ Max. permissible surge current: tbd A, duration max. tbd µs.

⑤ Max. permissible repetitive peak current for STARK-FLE-G1-LES30: tbd mA. Max. permissible repetitive peak current for STARK-FLE-G1-LES40: tbd mA.

⑥ Assumed efficiency for the LED control gear is 0.9.

⑦ All values at tp = 65 °C.

RoHS

TALEX(module RECTANGULAR P440-2
EOS

Product description

- Street lighting
- High-flux LED module
- Narrow colour temperature tolerance band
- Compact design
- Excellent thermal management ①
- NTC for temperature control
- High-power LED in chip-on-board technology (COB)
- Beam characteristic: 140°
- Uniform distribution of light
- Mounting with M3 screws
- Built-in LED module
- Cooling required

→ For product data sheet go to www.tridonic.com, or available on request

Technical data

Typ. power at 1,050 mA ② ③	40 W
Risk group (EN 62471:2008)	0

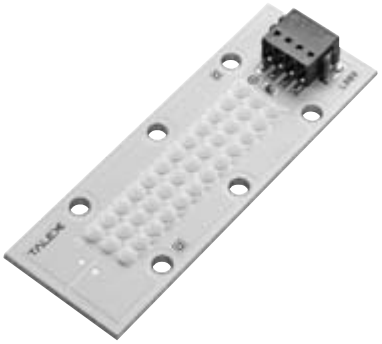

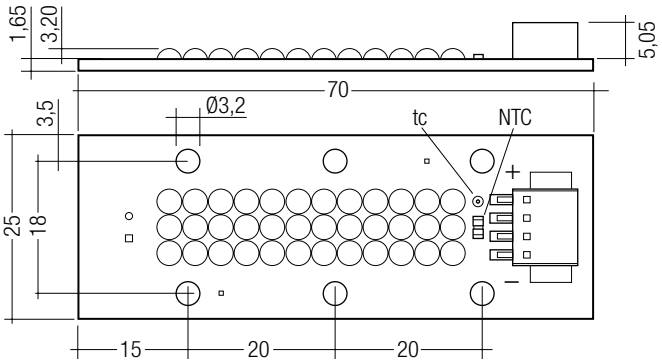

For standards see data sheet

For colour temperatures and tolerances see data sheet

Ordering data

Type	Article number	Colour temperature ④ ⑤	Packaging, carton	Weight per pc.
LED P440-2 3000K 70x25	**89601161**	3,000 K	20 pc(s).	0.008 kg
LED P440-2 4000K 70x25	**89601162**	4,000 K	20 pc(s).	0.008 kg
LED P440-2 5000K 70x25	**89601155**	5,000 K	20 pc(s).	0.008 kg

Specific technical data

Type	Photometric code	Min. luminous flux at 1,050 mA ③ ⑥	Typ. luminous flux at 1,050 mA ③ ⑥	Typ. forward current ⑦ ⑧	Max. forward current ⑦ ⑧	Min. forward voltage ② ③	Typ. forward voltage ② ③	Max. forward voltage ② ③	Colour rendering index CRI ⑤	Energy classification
LED P440-2 3000K 70x25	830/4x9	2,400 lm	2,700 lm	1,050 mA	1,400 mA	33.3 V	38 V	44.8 V	> 80	A
LED P440-2 4000K 70x25	840/4x9	2,700 lm	3,000 lm	1,050 mA	1,400 mA	33.3 V	38 V	44.8 V	> 80	A
LED P440-2 5000K 70x25	750/4x9	3,400 lm	3,800 lm	1,050 mA	1,400 mA	33.3 V	38 V	44.8 V	> 70	A+

① If the max. temperature limits are exceeded, the life of the system will be greatly reduced or the system may be damaged. The temperature of the TALEX(module RECTANGULAR at the tc-point is to be measured in the thermally stable state with a temperature sensor or a temperature sensitive sticker according to EN 60598-1. For the precise position of the tc point see the above diagram.
② Tolerance range for electrical data: ±15 %.
③ At tc = 65 °C.
④ Colour coordinates and tolerances according to CIE 1964.
⑤ Colour temperature and colour rendering index CRI according to CIE 1931.
⑥ Tolerance range for optical data: ±15 %.
⑦ Exceeding the max. operating current leads to an overload on the TALEX(module RECTANGULAR. This may in turn result in a significant reduction in lifetime or even destruction of the TALEX(module RECTANGULAR.
⑧ Max. permissible surge current: 3 A, duration max. 10 µs.

RoHS

TALEXmodule STRIP P130-2
EOS

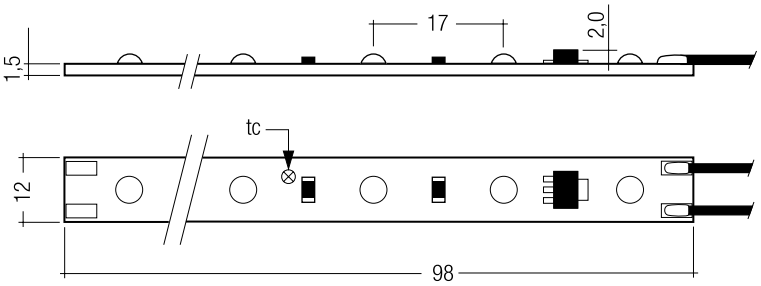

Product description

- LED strip module for linear illumination, highlighting of lines and edges and for side injection
- For safety lighting, general lighting, effect lighting and shelf lighting
- Suitable for TALEXaccessory PROFILE Z200-2 / Z201-2 / Z22W-2
- Edge injection of transparent or diffuse materials
- With maximum possible beam angle for uniform illumination
- Low-profile
- Simple installation thanks to pre-fitted adhesive tape
- High-power LED in chip-on-board technology (COB)
- Dimmable by pulse width modulation (PWM)
- Integrated current source to stabilise luminous flux
- Wide 140° distribution of light for uniform illumination
- Mounting with premounted thermally conductive double-sided adhesive tape
- Connection: cable 200 mm

→ For product data sheet go to www.tridonic.com, or available on request

Technical data

Ambient temperature ta	-30 ... +40 °C
Max. tc point①	75 °C
Risk group (EN 62471:2008)	0

→

For standards see data sheet

For wiring diagrams and installation examples see data sheet

For colour temperatures and tolerances see data sheet

Ordering data

Type	Article number	Colour ① ②	Colour temperature	Packaging, carton	Weight per pc.
6 light points per module					
P130-2 DL	**89600745**	Daylight white	6,500 K	20 pc(s).	0.007 kg
P130-2 NW	**89600746**	Neutral white	4,200 K	20 pc(s).	0.007 kg
P130-2 WW	**89600747**	Warm white	3,000 K	20 pc(s).	0.007 kg
P130-2 GOLD	**89600744**	Gold	2,700 K	20 pc(s).	0.007 kg
P130-2 CM2	**89600786**	Cool meat	–	20 pc(s).	0.007 kg
P130-2 CM3	**89600976**	Cool meat +	–	20 pc(s).	0.007 kg

Specific technical data

Type	Typ. luminous flux ③	Supply voltage DC ④	Power ③	Colour rendering index CRI/Rff ⑤	Energy classification
6 light points per module					
P130-2 DL	156 lm	24 V	2.9 W	> 75	A
P130-2 NW	128 lm	24 V	2.9 W	> 80	A
P130-2 WW	114 lm	24 V	2.5 W	> 80	A
P130-2 GOLD	96 lm	24 V	2.5 W	> 90	A
P130-2 CM2	100 lm	24 V	2.9 W	> 75	A
P130-2 CM3	80 lm	24 V	2.5 W	> 75	A

① Rth, j-hs = Thermal Resistance (Junction – Heat Sink).
Exceeding the max. temperature limits leads to a reduced life or the module can be damaged.
Measuring of the temperature at the tc-point in the thermally stable state with a temperature sensor.
② Gold: light colour for cheese and pastries, cool meat: light colour for fresh meat and sausages.
③ Tolerance range for optical and electrical data: ±15 %.
④ Exceeding the max. operating voltage leads to an overload on the TALEXmodule STRIP.
This may in turn result in a reduction in lifetime or even in destruction.
Tolerance range for the supply voltage: 12 V: +2 V / -0 V; 24 V: +2 V / -0 V.
⑤ Rff (cool meat and cool meat +): specific reflection index for illumination of meat and meat products according to standard DIN 10504.

RoHS

TALEX(module EOS P211-3
EOS

Product description
- General lighting
- Design and effect lighting
- Emergency lighting
- Spotlights
- High-flux LED module
- Narrow colour temperature tolerance band
- Compact design
- Excellent thermal management
- Integrated polarity reversal protection
- Optional spot lens accessory TALEX(accessory LENS O211-2
- High-power LED in chip-on-board technology (COB)
- Low thermal resistance $R_{th, j\text{-}hs}$ < 10 K/W
- Mounting with premounted thermally conductive adhesive tape
- Connection: cable 200 mm
- Cooling required

→ For product data sheet go to www.tridonic.com, or available on request

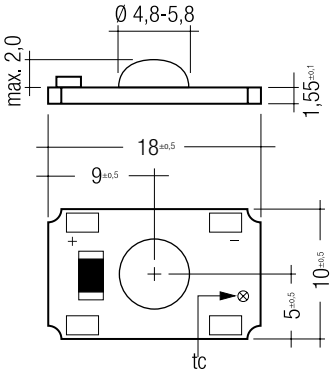

Technical data

Beam characteristic	140°
Supply voltage at 700 mA	3 – 4 V
Ambient temperature ta ①	-25 ... +55 °C
tc point	75 °C
Risk group (EN 62471:2008)	0

→

For standards see data sheet

Optional accessory, page 204 and page 205

For wiring diagrams and installation examples see data sheet

For colour temperatures and tolerances see data sheet

Ordering data

Type	Article number	Colour ②	Colour temperature	Packaging, carton	Weight per pc.
1 light point per module					
P211-3 WW	**89600667**	Warm white	3,000 K	100 pc(s).	0.001 kg
P211-3 NW	**89600666**	Neutral white	4,200 K	100 pc(s).	0.001 kg
P211-3 DL	**89600684**	Daylight white	6,500 K	100 pc(s).	0.003 kg
P211-3 GOLD	**89600940**	Gold	2,700 K	100 pc(s).	0.003 kg
P211-3 CM	**89600939**	Cool meat	–	100 pc(s).	0.003 kg
P211-3 CM+	**89600951**	Cool meat +	–	100 pc(s).	0.003 kg

Specific technical data

Type	Typ. luminous flux at 350 mA①	Typ. luminous flux at 700 mA①	Current DC, typ.③	Current DC, max.④	Power at 350 mA①	Power at 700 mA①	Colour rendering index CRI⑤	Energy classification
1 light point per module								
P211-3 WW	51 lm	73 lm	350 mA	700 mA	1.2 W	2.4 W	> 80	A+ at 350 mA / A at 700 mA
P211-3 NW	59 lm	84 lm	350 mA	700 mA	1.2 W	2.4 W	> 80	A+ at 350 mA / A at 700 mA
P211-3 DL	73 lm	104 lm	350 mA	700 mA	1.2 W	2.4 W	> 80	A+ at 350 mA / A at 700 mA
P211-3 GOLD	54 lm	90 lm	350 mA	700 mA	1.2 W	2.4 W	> 90	A+ at 350 mA / A at 700 mA
P211-3 CM	60 lm	100 lm	350 mA	700 mA	1.2 W	2.4 W	> 80	A+ at 350 mA / A at 700 mA
P211-3 CM+	48 lm	80 lm	350 mA	700 mA	1.2 W	2.4 W	> 70	A+ at 350 mA / A at 700 mA

① Tolerance range for optical and electrical data: ±15 %.
② Colour coordinates and tolerances according to CIE 1964.
③ Exceeding the max. operating current leads to an overload on the TALEX(module EOS.
This may in turn result in a significant reduction in lifetime or even destruction of the TALEX(module EOS.
④ Rth, j-hs = Thermal Resistance (Junction – Heat Sink).
Exceeding the max. temperature limits leads to a reduced life or the module can be damaged.
Measuring of the temperature at the tc-point in the thermally stable state with a temperature sensor.
⑤ Colour temperature and colour rendering index CRI according to CIE 1931.

RoHS

TALEXmodule EOS P211-4

EOS

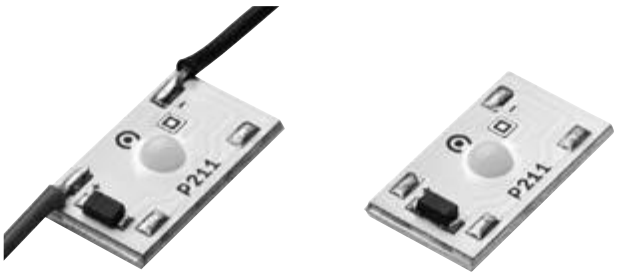

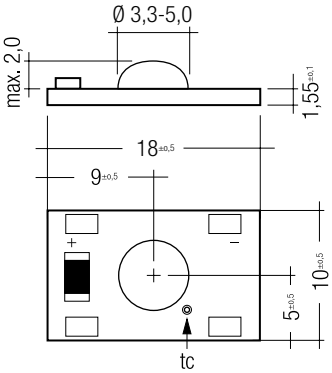

Product description

- General lighting
- Design and effect lighting
- Emergency lighting
- Spotlights
- High-flux LED module
- Narrow colour temperature tolerance band
- Compact design
- Excellent thermal management
- Integrated polarity reversal protection
- Optional spot lens accessory TALEXaccessory LENS O211-2
- High-power LED in chip-on-board technology (COB)
- Low thermal resistance $R_{th, j-hs}$ < 10 K/W
- Mounting with premounted thermally conductive double-sided adhesive tape
- Available with or without connection cable
- Connection: cable 200 mm
- Cooling required

→ For product data sheet go to www.tridonic.com, or available on request

Technical data

Beam characteristic	140°
Supply voltage at 700 mA	2 – 4 V
Ambient temperature ta	-25 ... +55 °C
tc point	75 °C
Type of protection	IP00
Risk group (EN 62471:2008)	0

→

For standards see data sheet

Optional accessory, page 204 and page 205

For wiring diagrams and installation examples see data sheet

For colour temperatures and tolerances see data sheet

Ordering data

Type	Article number	Colour ①	Wavelength	Colour temperature ②	Connection cable	Packaging, carton	Weight per pc.
1 light point per module							
P211-4 WW	**89600536**	Warm white	–	3,000 K	yes	100 pc(s).	0.001 kg
P211-4 NW	**89600535**	Neutral white	–	4,200 K	yes	100 pc(s).	0.003 kg
P211-4 DL	**89600534**	Daylight white	–	6,500 K	yes	100 pc(s).	0.003 kg
P211-4 R	**89601207**	Red	620 – 627 nm	–	yes	100 pc(s).	0.001 kg
P211-4 G	**89601208**	Green	520 – 530 nm	–	yes	100 pc(s).	0.001 kg
P211-4 B	**89601209**	Blue	455 – 465 nm	–	yes	100 pc(s).	0.001 kg
P211-4 GOLD	**89601461**	Gold	–	2,700 K	yes	100 pc(s).	0.001 kg
P211-4 PM	**89601462**	Packed meat	–	–	yes	100 pc(s).	0.001 kg
P211-4 WW	**89601354**	Warm white	–	3,000 K	no	100 pc(s).	0.002 kg
P211-4 NW	**89601212**	Neutral white	–	4,200 K	no	100 pc(s).	0.008 kg
P211-4 DL	**89601210**	Daylight white	–	6,500 K	no	100 pc(s).	0.001 kg
P211-4 GOLD	**89601463**	Gold	–	2,700 K	no	100 pc(s).	0.001 kg
P211-4 PM	**89601464**	Packed meat	–	–	no	100 pc(s).	0.001 kg
P211-4 CW	**89601513**	Crystal white	–	7,500 K	no	100 pc(s).	0.001 kg
P211-4 POML	**89601600**	Promolux meat	–	–	no	100 pc(s).	0.001 kg

Specific technical data

Type	Typ. luminous flux at 350 mA ③ ④	Typ. luminous flux at 700 mA ③ ④	Current DC, typ. ⑤ ⑥	Current DC, max. ⑤ ⑥	Power at 350 mA ④ ⑦	Power at 700 mA④ ⑦	Colour rendering index CRI	Energy classification
1 light point per module								
P211-4 WW	75.0 lm	125.0 lm	350 mA	700 mA	1.2 W	2.4 W	> 80	A+ at 350 mA / A+ at 700 mA
P211-4 NW	82.0 lm	128.0 lm	350 mA	700 mA	1.2 W	2.4 W	> 80	A+ at 350 mA / A+ at 700 mA
P211-4 DL	100.0 lm	150.0 lm	350 mA	700 mA	1.2 W	2.4 W	> 75	A++ at 350 mA / A+ at 700 mA
P211-4 R	31.0 lm	51.0 lm	350 mA	700 mA	0.9 W	1.8 W	–	A+ at 350 mA / A at 700 mA
P211-4 G	57.0 lm	87.0 lm	350 mA	700 mA	1.2 W	2.4 W	–	A+ at 350 mA / A at 700 mA
P211-4 B	12.5 lm	20.3 lm	350 mA	700 mA	1.2 W	2.4 W	–	B at 700 mA / B at 350 mA
P211-4 GOLD	56.0 lm	87.0 lm	350 mA	700 mA	1.2 W	2.4 W	> 90	A+ at 350 mA / A at 700 mA
P211-4 PM	54.0 lm	85.0 lm	350 mA	700 mA	1.2 W	2.4 W	> 80	A+ at 350 mA / A at 700 mA
P211-4 CW	95.0 lm	143.0 lm	350 mA	700 mA	1.2 W	2.4 W	> 70	A++ at 350 mA / A+ at 700 mA
P211-4 POML	52.0 lm	86.0 lm	350 mA	700 mA	1.2 W	2.4 W	> 50	A+ at 350 mA / A at 700 mA

① Colour temperature and colour rendering index CRI according to CIE 1931.
② Colour coordinates and tolerances according to CIE 1964.
③ Tolerance range for optical data: ±15 %.
④ At tc = 75 °C.
⑤ Exceeding the max. operating current leads to an overload on the TALEX(module EOS.
This may in turn result in a significant reduction in lifetime or even destruction of the TALEX(module EOS.
⑥ Rth, j-hs = Thermal Resistance (Junction – Heat Sink).
Exceeding the max. temperature limits leads to a reduced life or the module can be damaged.
Measuring of the temperature at the tc-point in the thermally stable state.
⑦ Tolerance range for optical and electrical data: ±15 %.

RoHS

TALEXmodule EOS P214-4
EOS

Product description

- General lighting
- Design and effect lighting
- Spotlights
- High-flux LED module
- Narrow colour temperature tolerance band
- Compact design
- Excellent thermal management
- Integrated polarity reversal protection
- Optional spot lens accessory TALEXaccessory LENS O214
- High-power LED in chip-on-board technology (COB)
- Low thermal resistance $R_{th, j\text{-}hs}$ < 2.5 K/W
- Mounting with premounted thermally conductive double-sided adhesive tape
- Connection: cable 200 mm
- Cooling required

→ For product data sheet go to www.tridonic.com, or available on request

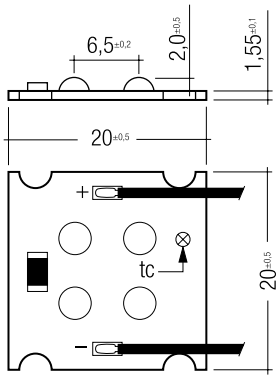

Technical data

Beam characteristic	140°
Ambient temperature ta	-25 ... +55 °C
Typ. tc point	65 °C
Risk group (EN 62471:2008)	0

Ordering data

Type	Article number	Colour	Colour temperature	Packaging, carton	Weight per pc.
P214-4 WW	**89601373**	Warm white	3,000 K	25 pc(s).	0.004 kg
P214-4 NW	**89601372**	Neutral white	4,200 K	25 pc(s).	0.004 kg
P214-4 DL	**89601371**	Daylight white	3,000 K	25 pc(s).	0.005 kg

→

For standards see data sheet

Optional accessory, page 206

For wiring diagrams and installation examples see data sheet

For colour temperatures and tolerances see data sheet

Specific technical data

Type	Typ. luminous flux at 350 mA ①	Typ. luminous flux at 700 mA ①	Current DC, typ. ① ② ③	Current DC, max. ① ② ③	Typ. forward voltage at 350 mA ①	Typ. forward voltage at 700 mA ①	Power at 350 mA ①	Power at 700 mA ①	Colour rendering index CRI	Typ. luminous efficacy at 350 mA	Typ. luminous efficacy at 700 mA	Energy classification
P214-4 WW	310 lm	515 lm	350 mA	700 mA	13.6 V	14 V	4.8 W	9.8 W	> 80	65 lm/W	53 lm/W	A at 350 mA / B at 700 mA
P214-4 NW	340 lm	525 lm	350 mA	700 mA	13.6 V	14 V	4.8 W	9.8 W	> 80	71 lm/W	54 lm/W	A+ at 350 mA / A at 700 mA
P214-4 DL	410 lm	620 lm	350 mA	700 mA	13.6 V	14 V	4.8 W	9.8 W	> 70	85 lm/W	63 lm/W	A+ at 350 mA / A at 700 mA

① Tolerance range for optical and electrical data: ±15 %.
② Rth, j-hs = Thermal Resistance (Junction – Heat Sink).
Exceeding the max. temperature limits leads to a reduced life or the module can be damaged.
Measuring of the temperature at the tc-point in the thermally stable state.
③ Exceeding the max. operating current leads to an overload on the TALEXmodule EOS.
This may in turn result in a significant reduction in lifetime or even destruction of the TALEXmodule EOS.

RoHS

TALEX(module EM-AP 003
EMERGENCY

Product description
- LED emergency lighting module
- Anti-panic emergency lighting:
  illuminance E ≥ 0.5 lux (as per EN 1838)
- Compatible with EM powerLED 1 W

Properties
- High-power LED in chip-on-board technology (COB)
- Long life thanks to integrated heat removal
- Optimised system efficiency with broad beam characteristic
- Integrated bi-colour status LED
- Reverse polarity protection
- Small dimensions
- Different installation options
- Connection: cable 300 mm

→ For product data sheet go to www.tridonic.com,
or available on request

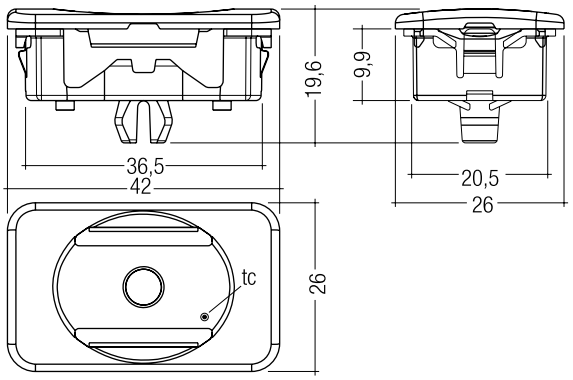

Technical data

Colour rendering index CRI	> 70
Ambient temperature ta	-20 ... +50 °C
tc point ①	60 °C

→

For standards see data sheet

For wiring diagrams and installation examples see data sheet

For colour temperatures and tolerances see data sheet

Ordering data

Type	Article number	Colour ②	Colour temperature	Packaging, carton	Weight per pc.
EM-AP 003	**89600960**	Daylight white	6,500 K	10 pc(s).	0.025 kg

Specific technical data

Type	Typ. luminous flux	Min. luminous flux	Max. current ③	Power ④ ⑤
EM-AP 003	100 lm	90 lm	350 mA	1.2 W

① If the max. temperature limits are exceeded, the life of the module will be reduced or the module may be damaged.
The temperature of the TALEX(module at the tc-point is to be measured
in the thermally stable state. For tc-point see the above diagram.
② Colour temperature and colour rendering index CRI according to CIE 1931.
③ Exceeding the max. operating current leads to an overload on the TALEX(module.
This may in turn result in a significant reduction in lifetime or even destruction of the TALEX(module.
④ Tolerance range for optical and electrical data: ±15 %.
⑤ Data for operation with 350 mA.

RoHS

TALEX(module EM-ER 003
EMERGENCY

Product description
- LED emergency lighting module
- Escape route emergency lighting:
  illuminance E = 1.0 lux (as per EN 1838)
- Compatible with EM powerLED 1 W

Properties
- High-power LED in chip-on-board technology (COB)
- Long life thanks to integrated heat removal
- Optimised system efficiency with beam characteristic
- Integrated bi-colour status LED
- Reverse polarity protection
- Small dimensions
- Different installation options
- Connection: cable 300 mm

→ For product data sheet go to www.tridonic.com,
or available on request

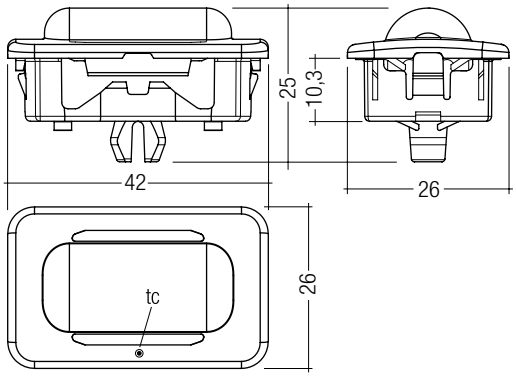

Technical data

Colour rendering index CRI	> 70
Ambient temperature ta	-20 ... +50 °C
tc point	60 °C

→

For standards see data sheet

For wiring diagrams and installation examples see data sheet

For colour temperatures and tolerances see data sheet

Ordering data

Type	Article number	Colour ①	Colour temperature	Packaging, carton	Weight per pc.
EM-ER 003	**89600961**	Daylight white	6,500 K	10 pc(s).	0.016 kg

Specific technical data

Type	Typ. luminous flux ②	Min. luminous flux	Max. current ③	Power ① ④
EM-ER 003	90 lm	80 lm	350 mA	1.2 W

① Tolerance range for optical and electrical data: ±15 %.
② Data for operation with 350 mA.
③ If the max. temperature limits are exceeded, the life of the module will be reduced or the module may be damaged.
The temperature of the TALEX(module at the tc-point is to be measured in the thermally stable state. For tc-point see the above diagram.
④ Exceeding the max. operating current leads to an overload on the TALEX(module.
This may in turn result in a significant reduction in lifetime or even destruction of the TALEX(module.

RoHS

TALEX(module EM-ES 08/10/12
EMERGENCY

Product description
- Lighting module with 8, 10 or 12 high-power LEDs (emergency lighting strip)
- For use in escape route signs
- For edge-lit signs

Properties
- Suitable for Tridonic EM powerLED emergency lighting units
- For permanent and standby operation
- Wide 120° distribution of light for uniform illumination
- Operation on a constant current source
- Replacement for 8 W T5 flourescent lamp
- Several options for uniform light distribution
- Can be interconnected to create longer strips
- Low energy consumption
- Long life thanks to low operating temperature
- Provides a maintenance-free escape sign system
- Polarity reversal protection for battery
- Simple mounting/installation

→ For product data sheet go to www.tridonic.com, or available on request

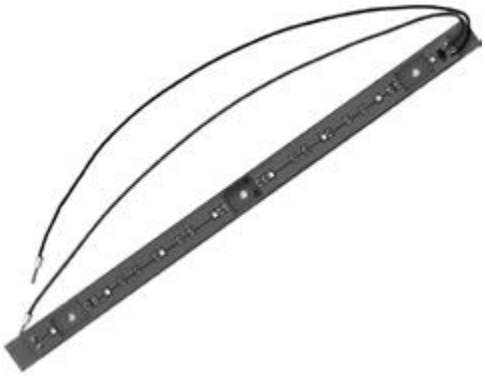

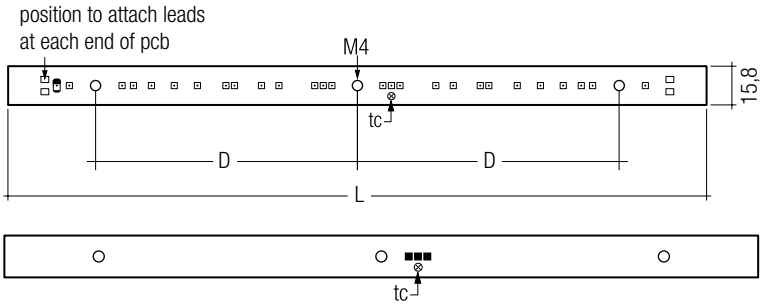

For standards see data sheet

For wiring diagrams and installation examples see data sheet

For colour temperatures and tolerances see data sheet

Ordering data

Type	Article number	Colour	Colour temperature	Packaging, carton	Packaging, pallet	Weight per pc.
8 light points per module						
EM-ES 08 285	**89899947**	Daylight white	6,500 K	25 pc(s).	600 pc(s).	0.016 kg
EM-ES 08 246	**89899954**	Daylight white	6,500 K	25 pc(s).	600 pc(s).	0.014 kg
10 light points per module						
EM-ES 10 285	**89899948**	Daylight white	6,500 K	25 pc(s).	600 pc(s).	0.017 kg
12 light points per module						
EM-ES 12 285	**89899949**	Daylight white	6,500 K	25 pc(s).	600 pc(s).	0.018 kg

Specific technical data

Type	Typ. luminous flux ① ②	Max. current ③	Power ① ②	Ambient temperature ta ②	tc point ④	Total length	Hole spacing D
8 light points per module							
EM-ES 08 246	80 lm	350 mA	typ. 1.1 W	-20 ... +40 °C	60 °C	246 mm	97.9 mm
EM-ES 08 285	80 lm	350 mA	typ. 1.1 W	-20 ... +40 °C	60 °C	285 mm	106.8 mm
10 light points per module							
EM-ES 10 285	80 lm	350 mA	typ. 1.1 W	-20 ... +40 °C	60 °C	285 mm	106.8 mm
12 light points per module							
EM-ES 12 285	80 lm	350 mA	typ. 1.1 W	-20 ... +40 °C	60 °C	285 mm	106.8 mm

① Tolerance range for optical and electrical data: ±15 %.
② Data for operation with 350 mA.
③ Exceeding the max. operating current leads to an overload on the TALEX(module STRIP.
This may in turn result in a significant reduction in lifetime or even destruction of the TALEX(module STRIP.
④ If the max. temperature limits are exceeded, the life of the module will be reduced or the module may be damaged.
The temperature of the TALEX(module STRIP at the tc-point is to be measured in the thermally stable state. For tc-point see the above diagram.

RoHS

TALEXmodule EM-ES 08/10/12 Mk2
EMERGENCY

Product description
- Lighting module with 8, 10 or 12 LEDs
- For use in escape route signs
- Compatible with EM powerLED 1 W

Properties
- Suitable for Tridonic EM powerLED emergency lighting units
- For permanent and standby operation
- Wide 120° distribution of light for uniform illumination
- Operation on a constant current source
- Replacement for 8 W T5 flourescent lamp
- Several options for uniform light distribution
- Can be interconnected to create longer strips
- Low energy consumption
- Long life thanks to low operating temperature
- Provides a maintenance-free escape sign system
- Simple mounting/installation
- Push-in terminals for simple and quick wiring

Note
Separate status LED required

→ For product data sheet go to www.tridonic.com, or available on request

Technical data

Ambient temperature ta ①	-30 ... +55 °C
Typ. tc point ②	60 °C
Typ. luminous flux at 25 °C ① ③	100 lm
Max. forward current ④	350 mA
Typ. forward voltage at 25 °C	3.2 V
Max. forward voltage	3.4 V
Typ. power ① ③	1.1 W
Colour rendering index CRI	80
Beam characteristic	120°
Risk group (EN 62471:2008)	0
Type of protection	IP00

→

For standards see data sheet

For wiring diagrams and installation examples see data sheet

For colour temperatures and tolerances see data sheet

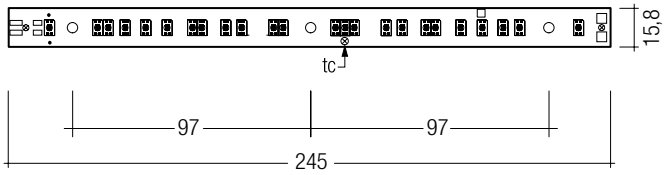

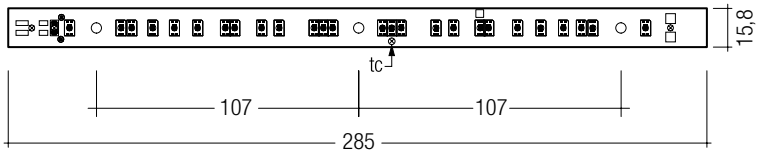

Ordering data

Type	Article number	Colour	Colour temperature	Packaging, carton	Packaging, pallet	Weight per pc.
12 light points per module						
ES 12 285 Mk2	**89800248**	Daylight white	6,500 K	25 pc(s).	600 pc(s).	0.018 kg
8 light points per module						
ES 08 246 Mk2	**89800249**	Daylight white	6,500 K	25 pc(s).	600 pc(s).	0.014 kg
ES 08 285 Mk2	**89800250**	Daylight white	6,500 K	25 pc(s).	600 pc(s).	0.016 kg
10 light points per module						
ES 10 285 Mk2	**89800251**	Daylight white	6,500 K	25 pc(s).	600 pc(s).	0.017 kg

Specific technical data

Type	Article number	Total length	Hole spacing D
ES 08 246 Mk2	89800249	245 mm	97 mm
ES 08 285 Mk2	89800250	285 mm	107 mm
ES 10 285 Mk2	89800251	285 mm	107 mm
ES 12 285 Mk2	89800248	285 mm	107 mm

① Data for operation with 350 mA.
② If the max. temperature limits are exceeded, the life of the module will be reduced or the module may be damaged. The temperature of the TALEX module at the tc-point is to be measured in the thermally stable state. For tc-point see the above diagram.
③ Tolerance range for optical and electrical data: ±15 %.
④ Exceeding the max. operating current leads to an overload on the TALEX module.
This may in turn result in a significant reduction in lifetime or even destruction of the TALEX module.

RoHS

ACCES-SORIES

Status indication green LED

Product description

- A green LED indicates that charging current is flowing into the battery
- Plug connection

Ordering data

Type	Article number	Packaging, bag	Packaging, carton	Weight per pc.
LED EM green	**89899605**	25 pc(s).	200 pc(s).	0.011 kg
LED EM green, ultra high brightness	**89899756**	25 pc(s).	800 pc(s).	0.012 kg

RoHS

ACCES-SORIES

Status indication bi-colour LED

Product description

- Two-colour status display LED
- Green: system OK, red: fault

Ordering data

Type	Article number	Packaging, bag	Packaging, carton	Weight per pc.
LED EM bi-colour	**89899720**	25 pc(s).	200 pc(s).	0.017 kg
LED EM bi-colour, high brightness	**89899753**	25 pc(s).	800 pc(s).	0.013 kg

TALEXmodule STARK LLE 35-270-1250

STARK LLE

Product description

- Ideal for linear and panel lights
- LED system solution with outstanding system efficiency up to 118 lm/W, consisting of linear LED module and dimmable LED control gear LCAI 080/0350
- Efficiency of the module up to 131 lm/W
- High colour rendering index CRI > 80
- Small colour tolerance MacAdam 3 ①
- Small luminous flux tolerances
- Colour temperatures 3,000 and 4,000 K
- Perfectly uniform light, even if several LED modules are used together in a line
- Push terminals for quick and simple wiring of LED module to LED module
- Simple installation (e.g. screws)
- Long lifetime: 50,000 hours
- 5-year system guarantee on the complete product

→ For product data sheet go to www.tridonic.com, or available on request

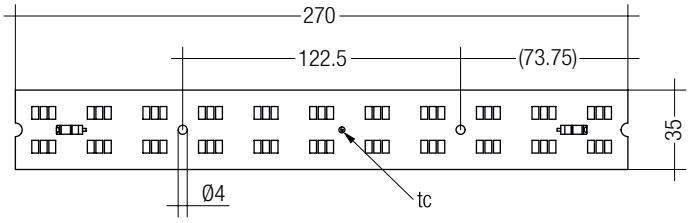

Technical data

Beam characteristic	120°
Ambient temperature ta	-30 ... +55 °C
Typ. tp point	65 °C
Risk group (EN 62471:2008)	0
Type of protection	IP00

Ordering data

Type	Article number	Colour temperature	Packaging, carton	Weight per pc.
STARK-LLE-G2-1250-830-CLA	**28000140**	3,000 K	200 pc(s).	0.045 kg
STARK-LLE-G2-1250-840-CLA	**28000141**	4,000 K	200 pc(s).	0.059 kg

→

For standards see data sheet

For colour temperatures and tolerances see data sheet

Specific technical data

Type	Photometric code	Typ. luminous flux at tp = 25 °C ②	Typ. luminous flux at tp = 65 °C ②	Typ. forward current ② ③ ④	Typ. forward voltage ②	Typ. power consumption	Luminous efficacy module at tp = 25 °C	Luminous efficacy module at tp = 65 °C	Luminous efficacy system at tp = 65 °C	Colour rendering index CRI	Energy classification
Operating mode HE at 300 mA											
STARK-LLE-G2-1250-830-CLA	830/369	1,210 lm	1,180 lm	300 mA	32.5 V	9.8 W	123 lm/W	120 lm/W	110 lm/W	> 80	A+
STARK-LLE-G2-1250-840-CLA	840/369	1,280 lm	1,250 lm	300 mA	32.5 V	9.8 W	131 lm/W	128 lm/W	118 lm/W	> 80	A+
Operating mode HO at 350 mA											
STARK-LLE-G2-1250-830-CLA	830/369	1,390 lm	1,360 lm	350 mA	33.0 V	11.6 W	120 lm/W	117 lm/W	108 lm/W	> 80	A+
STARK-LLE-G2-1250-840-CLA	840/369	1,470 lm	1,440 lm	350 mA	33.0 V	11.6 W	127 lm/W	124 lm/W	114 lm/W	> 80	A+

① Integrated measurement over the complete module.
② Tolerance range for optical and electrical data: ±10 %.
③ Ripple max. 35 % of typ. forward current.
④ Max. permissible surge current: 1.5 A, duration max. 10 µs.

NEW

TALEX(module STARK LLE 16-280-650
STARK LLE

Product description

- Ideal for linear and panel lights
- Efficiency of the module up to 137 lm/W
- High colour rendering index CRI > 80
- Small colour tolerance MacAdam 4 ①
- Small luminous flux tolerances
- Colour temperatures 3,000 and 4,000 K
- Perfectly uniform light, even if several LED modules are used together in a line
- Push terminals for quick and simple wiring of LED module to LED module
- Simple installation (e.g. screws)
- Long lifetime: 50,000 hours
- 5-year guarantee

→ For product data sheet go to www.tridonic.com, or available on request

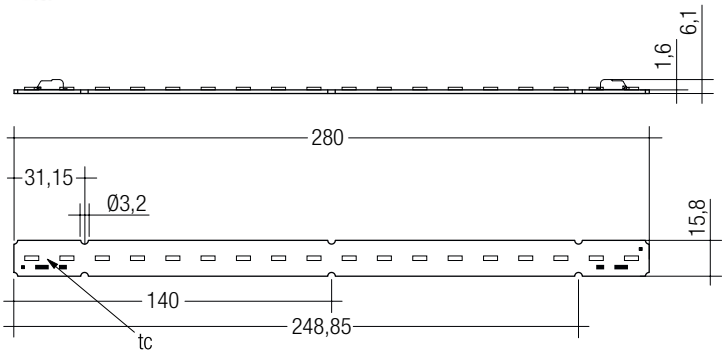

Technical data

Beam characteristic	120°
Ambient temperature ta	-30 ... +45 °C
Typ. tp point	65 °C
Risk group (EN 62471:2008)	0
Type of protection	IP00

→

For standards see data sheet

For colour temperatures and tolerances see data sheet

Ordering data

Type	Article number	Colour temperature	Packaging, carton
STARK-LLE16-280-650-830-CLA	**89601864**	3,000 K	1 pc(s).
STARK-LLE16-280-650-840-CLA	**89601865**	4,000 K	1 pc(s).

Specific technical data

Type ②	Photometric code	Typ. luminous flux at tp = 25 °C ③	Typ. luminous flux at tp = 65 °C ③	Typ. forward current ③ ④ ⑤	Typ. forward voltage	Typ. power consumption ③	Luminous efficacy module at tp = 25 °C	Luminous efficacy module at tp = 65 °C	Luminous efficacy system at tp = 65 °C	Colour rendering index CRI	Energy classification
Operating mode HE at 300 mA											
STARK-LLE16-280-650-830-CLA	830/4xx	710 lm	680 lm	300 mA	17.6 V	5.3 W	134 lm/W	128 lm/W	117 lm/W	> 80	A++
STARK-LLE16-280-650-840-CLA	840/4xx	740 lm	700 lm	300 mA	17.6 V	5.3 W	140 lm/W	132 lm/W	121 lm/W	> 80	A++
Operating mode HO at 350 mA											
STARK-LLE16-280-650-830-CLA	830/4xx	810 lm	770 lm	350 mA	17.9 V	6.3 W	129 lm/W	122 lm/W	113 lm/W	> 80	A+
STARK-LLE16-280-650-840-CLA	840/4xx	840 lm	800 lm	350 mA	17.9 V	6.3 W	133 lm/W	127 lm/W	118 lm/W	> 80	A+

① Integrated measurement over the whole module.
② HE ... high efficiency, HO ... high output.
③ Tolerance range for optical and electrical data: ±10 %.
④ Max. permissible repetitive peak current: 480 mA.
⑤ Max. permissible surge current: 1.5 A, duration max. 10 µs.

RoHS

TALEXmodule STARK LLE 24-280-1250

STARK LLE

Product description

- Ideal for linear and panel lights
- LED system solution with outstanding system efficiency up to 112 lm/W, consisting of linear LED module and dimmable LED control gear LCAI 080/0350
- Efficiency of the module up to 129 lm/W
- High colour rendering index CRI > 80
- Small colour tolerance MacAdam 3 ①
- Small luminous flux tolerances
- Colour temperatures 3,000, 4,000 and 5,000 K
- Perfectly uniform light, even if several LED modules are used together in a line
- Push terminals for quick and simple wiring of LED module to LED module
- Simple installation (e.g. screws)
- Long lifetime: 50,000 hours
- 5-year system guarantee on the complete product

→ For product data sheet go to www.tridonic.com, or available on request

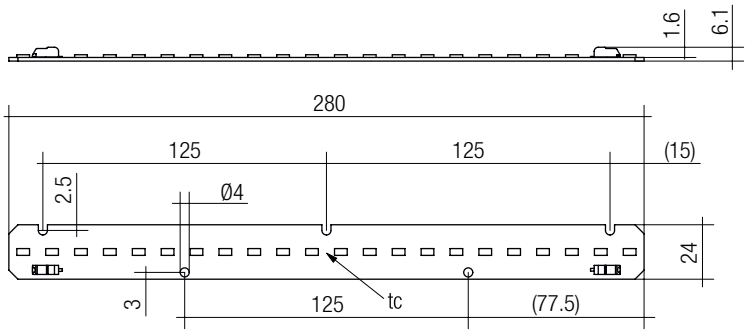

Technical data

Beam characteristic	120°
Ambient temperature ta	-30 ... +45 °C
Typ. tp point	65 °C
Risk group (EN 62471:2008)	0
Type of protection	IP00

Ordering data

Type	Article number	Colour temperature	Packaging, carton	Weight per pc.
STARK-LLE24-1250-830-CLA	**28000094**	3,000 K	300 pc(s).	0.023 kg
STARK-LLE24-1250-840-CLA	**28000095**	4,000 K	300 pc(s).	0.023 kg
STARK-LLE24-1250-850-CLA	**25000820**	5,000 K	300 pc(s).	0.023 kg

→

For standards see data sheet

For colour temperatures and tolerances see data sheet

Specific technical data

Type ②	Photometric code	Typ. luminous flux at tp = 25 °C ③	Typ. luminous flux at tp = 65 °C ③	Typ. forward current ③ ④ ⑤	Typ. forward voltage	Typ. power consumption ③	Luminous efficacy module at tp = 25 °C	Luminous efficacy module at tp = 65 °C	Luminous efficacy system at tp = 65 °C	Colour rendering index CRI	Energy classification
Operating mode HE at 300 mA											
STARK-LLE24-1250-830-CLA	830/369	1,190 lm	1,140 lm	300 mA	33.5 V	10.1 W	118 lm/W	113 lm/W	104 lm/W	> 80	A+
STARK-LLE24-1250-840-CLA	840/369	1,240 lm	1,190 lm	300 mA	33.5 V	10.1 W	123 lm/W	118 lm/W	109 lm/W	> 80	A+
STARK-LLE24-1250-850-CLA	850/369	1,260 lm	1,200 lm	300 mA	33.5 V	10.1 W	125 lm/W	119 lm/W	110 lm/W	> 80	A+
Operating mode HO at 350 mA											
STARK-LLE24-1250-830-CLA	830/369	1,360 lm	1,300 lm	350 mA	33.7 V	11.8 W	115 lm/W	110 lm/W	101 lm/W	> 80	A+
STARK-LLE24-1250-840-CLA	840/369	1,410 lm	1,360 lm	350 mA	33.7 V	11.8 W	119 lm/W	115 lm/W	106 lm/W	> 80	A+
STARK-LLE24-1250-850-CLA	850/369	1,440 lm	1,370 lm	350 mA	33.7 V	11.8 W	122 lm/W	116 lm/W	107 lm/W	> 80	A+

① Integrated measurement over the complete module.
② HE ... high efficiency, HO ... high output.
③ Tolerance range for optical and electrical data: ±10 %.
④ Ripple max. 15 % of typ. forward current.
⑤ Max. permissible surge current: 0.8 A, duration max. 10 µs.

RoHS

TALEX(module STARK LLE 24-280-1250 EM

STARK LLE

Product description

- Ideal for linear and panel lights
- Combined LED module for general and emergency lighting
- Integrated separate emergency LEDs controlled by EM powerLED (2 or 4 W version)
- Efficiency of the module up to 123 lm/W
- Separate wired emergency LED'S
- High colour rendering index CRI > 80
- Small colour tolerance MacAdam 3 ①
- Small luminous flux tolerances
- Colour temperatures 3,000 and 4,000 K
- Perfectly uniform light, even if several LED modules are used together in a line
- Push terminals for quick and simple wiring of LED module to LED module
- Simple installation (e.g. screws)
- Long lifetime: 50,000 hours
- 5-year system guarantee on the complete product

→ For product data sheet go to www.tridonic.com, or available on request

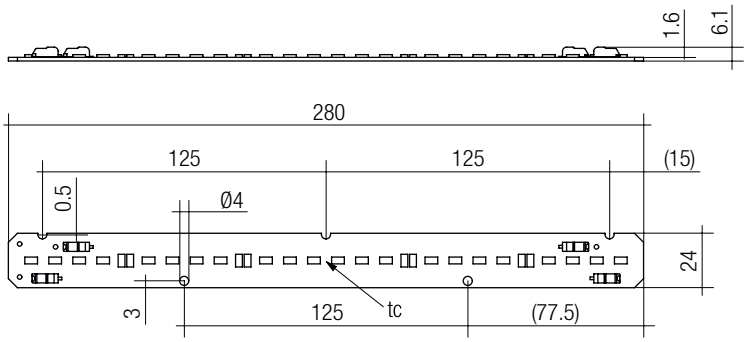

Technical data

Beam characteristic	120°
Ambient temperature ta	-30 ... +45 °C
Typ. tp point	65 °C
Risk group (EN 62471:2008)	0
Type of protection	IP00

Ordering data

Type	Article number	Colour temperature	Packaging, carton	Packaging, pallet	Weight per pc.
STARK-LLE24-1250-830-CLA EM	**25000816**	3,000 K	300 pc(s).	6,000 pc(s).	0.023 kg
STARK-LLE24-1250-840-CLA EM	**25000818**	4,000 K	300 pc(s).	6,000 pc(s).	0.023 kg

→

For standards see data sheet

For colour temperatures and tolerances see data sheet

Specific technical data

Type	Photometric code	Typ. luminous flux at tp = 25 °C	Typ. luminous flux at tp = 65 °C	Typ. forward current	Typ. forward voltage	Typ. power consumption	Luminous efficacy module at tp = 25 °C	Luminous efficacy module at tp = 65 °C	Luminous efficacy system at tp = 65 °C	Colour rendering index CRI	Energy classification
Operating mode HE at 300 mA											
STARK-LLE24-1250-830-CLA EM	830/369	1,190 lm	1,140 lm	300 mA	33.5 V	10.1 W	118 lm/W	113 lm/W	104 lm/W	> 80	A+
STARK-LLE24-1250-840-CLA EM	840/369	1,240 lm	1,190 lm	300 mA	33.5 V	10.1 W	123 lm/W	118 lm/W	109 lm/W	> 80	A+
Operating mode HO at 350 mA											
STARK-LLE24-1250-830-CLA EM	830/369	1,360 lm	1,300 lm	350 mA	33.7 V	11.8 W	115 lm/W	110 lm/W	101 lm/W	> 80	A+
STARK-LLE24-1250-840-CLA EM	840/369	1,410 lm	1,360 lm	350 mA	33.7 V	11.8 W	119 lm/W	115 lm/W	106 lm/W	> 80	A+
Emergency operation at 350 mA (EM powerLED 2 W)											
STARK-LLE24-1250-830-CLA EM	830/369	250 lm	240 lm	350 mA	6.1 V	2.1 W	119 lm/W	114 lm/W	–	> 80	–
STARK-LLE24-1250-840-CLA EM	840/369	260 lm	250 lm	350 mA	6.1 V	2.1 W	124 lm/W	119 lm/W	–	> 80	–
Emergency operation at 700 mA (EM powerLED 4 W)											
STARK-LLE24-1250-830-CLA EM	830/369	495 lm	475 lm	700 mA	6.2 V	4.3 W	115 lm/W	110 lm/W	–	> 80	–
STARK-LLE24-1250-840-CLA EM	840/369	525 lm	495 lm	700 mA	6.2 V	4.3 W	122 lm/W	115 lm/W	–	> 80	–

① Integrated measurement over the complete module.

RoHS

TALEXmodule STARK LLE 24-280-650

STARK LLE

Product description

- Ideal for linear and panel lights
- Efficiency of the module up to 121 lm/W
- High colour rendering index CRI > 80
- Small colour tolerance MacAdam 3 ①
- Small luminous flux tolerances
- Colour temperatures 3,000 and 4,000 K
- Perfectly uniform light, even if several LED modules are used together in a line
- Push terminals for quick and simple wiring of LED module to LED module
- Simple installation (e.g. screws)
- Long lifetime: 50,000 hours
- 5-year system guarantee on the complete product

→ For product data sheet go to www.tridonic.com, or available on request

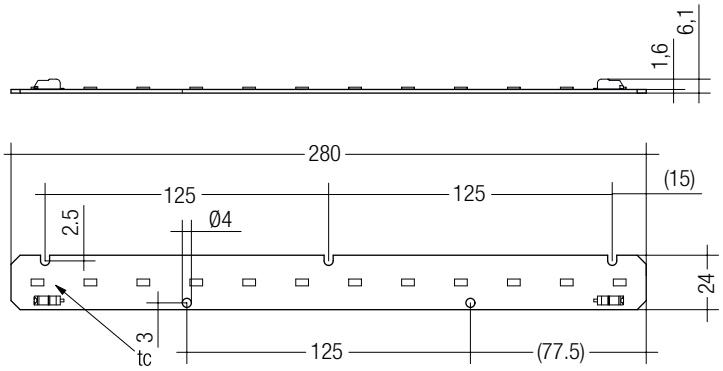

Technical data

Beam characteristic	120°
Ambient temperature ta	-30 ... +45 °C
Typ. tp point	65 °C
Risk group (EN 62471:2008)	0
Type of protection	IP00

→

For standards see data sheet

For colour temperatures and tolerances see data sheet

Ordering data

Type	Article number	Colour temperature	Packaging, carton	Weight per pc.
STARK-LLE-24-280-650-830-CLA	**28000155**	3,000 K	300 pc(s).	0.023 kg
STARK-LLE-24-280-650-840-CLA	**28000156**	4,000 K	300 pc(s).	0.023 kg

Specific technical data

Type ②	Photometric code	Typ. luminous flux at tp = 25 °C ③	Typ. luminous flux at tp = 65 °C ③	Typ. forward current ③ ④ ⑤	Typ. forward voltage	Typ. power consumption ③	Luminous efficacy module at tp = 25 °C	Luminous efficacy module at tp = 65 °C	Luminous efficacy system at tp = 65 °C	Colour rendering index CRI	Energy classification
Operating mode HE at 300 mA											
STARK-LLE-24-280-650-830-CLA	830/3x9	650 lm	630 lm	300 mA	18.5 V	5.6 W	116 lm/W	113 lm/W	104 lm/W	> 80	A+
STARK-LLE-24-280-650-840-CLA	840/3x9	680 lm	650 lm	300 mA	18.5 V	5.6 W	121 lm/W	116 lm/W	107 lm/W	> 80	A+
Operating mode HO at 350 mA											
STARK-LLE-24-280-650-830-CLA	830/3x9	750 lm	720 lm	350 mA	18.6 V	6.5 W	115 lm/W	111 lm/W	102 lm/W	> 80	A+
STARK-LLE-24-280-650-840-CLA	840/3x9	770 lm	740 lm	350 mA	18.6 V	6.5 W	118 lm/W	114 lm/W	105 lm/W	> 80	A+

① Integrated measurement over the whole module.
② HE ... high efficiency, HO ... high output.
③ Tolerance range for optical and electrical data: ±10 %.
④ Ripple max. 15 % of typ. forward current.
⑤ Max. permissible surge current: 0.8 A, duration max. 10 µs.

NEW

TALEX(module STARK LLE 24-280-2000

STARK LLE

Product description

- Ideal for linear and panel lights with high luminous flux
- Efficiency of the module up to 129 lm/W
- High colour rendering index CRI > 80
- Small colour tolerance MacAdam 4 ①
- Small luminous flux tolerances
- Colour temperatures 3,000 and 4,000 K
- Perfectly uniform light, even if several LED modules are used together in a line
- Push terminals for quick and simple wiring of LED module to LED module
- Simple installation (e.g. screws)
- Long lifetime: 50,000 hours
- 5-year guarantee

→ For product data sheet go to www.tridonic.com, or available on request

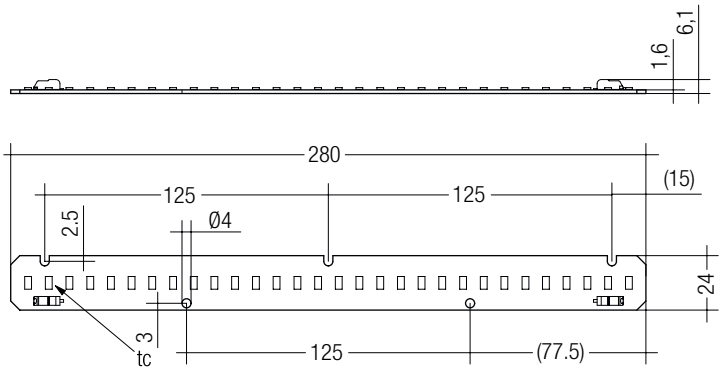

Technical data

Beam characteristic	120°
Ambient temperature ta	-30 ... +45 °C
Typ. tp point	65 °C
Risk group (EN 62471:2008)	0
Type of protection	IP00

→

For standards see data sheet

For colour temperatures and tolerances see data sheet

Ordering data

Type	Article number	Colour temperature	Packaging, carton
STARK-LLE24-280-2000-830-CLA	**89800360**	3,000 K	1 pc(s).
STARK-LLE24-280-2000-840-CLA	**89800361**	4,000 K	1 pc(s).

Specific technical data

Type ②	Photometric code	Typ. luminous flux at tp = 25 °C ③	Typ. luminous flux at tp = 65 °C ③	Typ. forward current ③ ④ ⑤	Typ. forward voltage	Typ. power consumption ③	Luminous efficacy module at tp = 25 °C	Luminous efficacy module at tp = 65 °C	Luminous efficacy system at tp = 65 °C	Colour rendering index CRI	Energy classification
Operating mode HE at 300 mA											
STARK-LLE24-280-2000-830-CLA	830/458	1,650 lm	1,580 lm	300 mA	44.7 V	13.4 W	123 lm/W	118 lm/W	106 lm/W	> 80	A+
STARK-LLE24-280-2000-840-CLA	840/458	1,770 lm	1,700 lm	300 mA	44.7 V	13.4 W	132 lm/W	127 lm/W	114 lm/W	> 80	A+
Operating mode HO at 350 mA											
STARK-LLE24-280-2000-830-CLA	830/458	1,900 lm	1,820 lm	350 mA	45.5 V	15.9 W	119 lm/W	114 lm/W	104 lm/W	> 80	A+
STARK-LLE24-280-2000-840-CLA	840/458	2,040 lm	1,960 lm	350 mA	45.5 V	15.9 W	128 lm/W	123 lm/W	111 lm/W	> 80	A+

① Integrated measurement over the whole module.
② HE ... high efficiency, HO ... high output.
③ Tolerance range for optical and electrical data: ±10 %.
④ Max. permissible repetitive peak current: 480 mA.
⑤ Max. permissible surge current: 0.8 A, duration max. 10 µs.

TALEXmodule STARK LLE 24-560-1300 CLASSIC

STARK LLE

Product description

- Ideal for linear and panel lights
- LED system solution with outstanding system efficiency up to 106 lm/W, consisting of linear LED module and dimmable LED control gear LCAI 040/0300
- Efficiency of the module up to 123 lm/W
- High colour rendering index CRI > 80
- Small colour tolerance MacAdam 3 ①
- Small luminous flux tolerances
- Colour temperatures 3,000 and 4,000 K
- Perfectly uniform light, even if several LED modules are used together in a line
- Push terminals for quick and simple wiring of LED module to LED module
- Simple installation (e.g. screws)
- Long lifetime: 50,000 hours
- 5-year guarantee

→ For product data sheet go to www.tridonic.com, or available on request

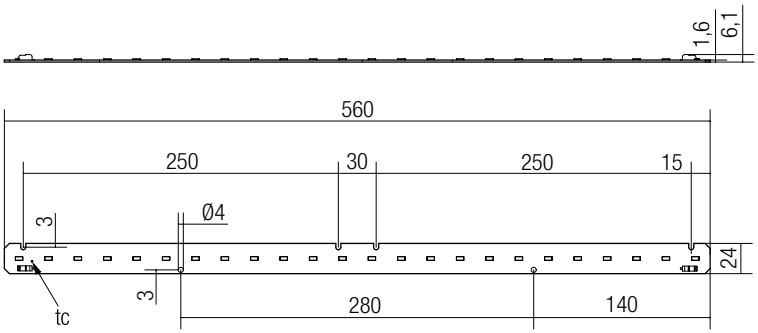

Technical data

Beam characteristic	120°
Ambient temperature ta	-30 ... +45 °C
Typ. tp point	65 °C
Risk group (EN 62471:2008)	0
Type of protection	IP00

Ordering data

Type	Article number	Colour temperature	Packaging, carton	Weight per pc.
STARK-LLE-24-560-1300-830-CLA	**28000157**	3,000 K	240 pc(s).	0.023 kg
STARK-LLE-24-560-1300-840-CLA	**28000158**	4,000 K	240 pc(s).	0.078 kg

→

For standards see data sheet

For colour temperatures and tolerances see data sheet

Specific technical data

Type ②	Photometric code	Typ. luminous flux at tp = 25 °C ③	Typ. luminous flux at tp = 65 °C ③	Typ. forward current ③ ④ ⑤	Typ. forward voltage	Typ. power consumption ③	Luminous efficacy module at tp = 25 °C	Luminous efficacy module at tp = 65 °C	Luminous efficacy system at tp = 65 °C	Colour rendering index CRI	Energy classification
Operating mode HE at 300 mA											
STARK-LLE-24-560-1300-830-CLA	830/369	1,300 lm	1,250 lm	300 mA	36.5 V	11.0 W	118 lm/W	114 lm/W	103 lm/W	> 80	A+
STARK-LLE-24-560-1300-840-CLA	840/369	1,350 lm	1,300 lm	300 mA	36.5 V	11.0 W	123 lm/W	118 lm/W	106 lm/W	> 80	A+
Operating mode HO at 350 mA											
STARK-LLE-24-560-1300-830-CLA	830/369	1,510 lm	1,450 lm	350 mA	36.7 V	12.9 W	117 lm/W	112 lm/W	101 lm/W	> 80	A+
STARK-LLE-24-560-1300-840-CLA	840/369	1,570 lm	1,500 lm	350 mA	36.7 V	12.9 W	122 lm/W	116 lm/W	105 lm/W	> 80	A+

① Integrated measurement over the whole module.
② HE ... high efficiency, HO ... high output.
③ Tolerance range for optical and electrical data: ±10 %.
④ Ripple max. 35 % of typ. forward current.
⑤ Max. permissible surge current: 1 A, duration max. 10 µs.

RoHS

TALEX(module STARK LLE 24-560-2400 CLASSIC

STARK LLE

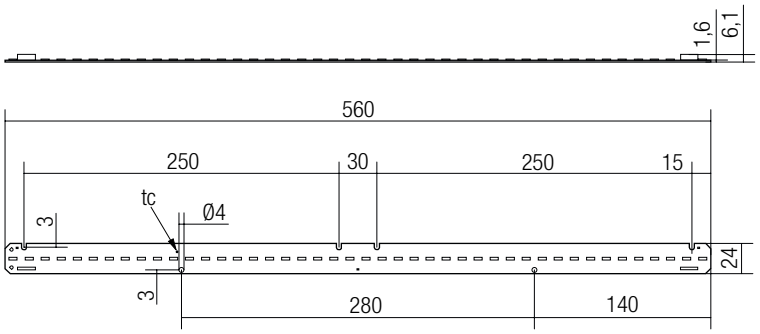

Product description

- Ideal for linear and panel lights
- LED system solution with outstanding system efficiency up to 111 lm/W, consisting of linear LED module and dimmable LED control gear LCAI 070/0300
- Efficiency of the module up to 123 lm/W
- High colour rendering index CRI > 80
- Small colour tolerance MacAdam 3 ①
- Small luminous flux tolerances
- Colour temperatures 3,000 and 4,000 K
- Perfectly uniform light, even if several LED modules are used together in a line
- Push terminals for quick and simple wiring of LED module to LED module
- Simple installation (e.g. screws)
- Long lifetime: 50,000 hours
- 5-year guarantee

→ For product data sheet go to www.tridonic.com, or available on request

Technical data

Beam characteristic	120°
Ambient temperature ta	-30 ... +45 °C
Typ. tp point	65 °C
Risk group (EN 62471:2008)	0
Type of protection	IP00

Ordering data

Type②	Article number	Colour temperature	Packaging, carton	Weight per pc.
STARK-LLE-24-560-2400-830-CLA	**28000241**	3,000 K	240 pc(s).	0.046 kg
STARK-LLE-24-560-2400-840-CLA	**28000242**	4,000 K	240 pc(s).	0.046 kg

→

For standards see data sheet

For colour temperatures and tolerances see data sheet

Specific technical data

Type②	Photometric code	Typ. luminous flux at tp = 25 °C③	Typ. luminous flux at tp = 65 °C③	Typ. forward current ③④⑤	Typ. forward voltage	Typ. power consumption③	Luminous efficacy module at tp = 25 °C	Luminous efficacy module at tp = 65 °C	Luminous efficacy system at tp = 65 °C	Colour rendering index CRI	Energy classification
Operating mode HE at 300 mA											
STARK-LLE-24-560-2400-830-CLA	830/369	2,370 lm	2,280 lm	300 mA	67.0 V	20.1 W	118 lm/W	113 lm/W	107 lm/W	> 80	A+
STARK-LLE-24-560-2400-840-CLA	840/369	2,470 lm	2,370 lm	300 mA	67.0 V	20.1 W	123 lm/W	118 lm/W	111 lm/W	> 80	A+
Operating mode HO at 350 mA											
STARK-LLE-24-560-2400-830-CLA	830/369	2,710 lm	2,610 lm	350 mA	68.1 V	23.8 W	114 lm/W	110 lm/W	103 lm/W	> 80	A+
STARK-LLE-24-560-2400-840-CLA	840/369	2,820 lm	2,710 lm	350 mA	68.1 V	23.8 W	118 lm/W	114 lm/W	107 lm/W	> 80	A+

① Central measurement over the whole module.
② HE ... high efficiency, HO ... high output.
③ Tolerance range for optical and electrical data: ±10 %.
④ Max. permissible repetitive peak current: 480 mA.
⑤ Max. permissible surge current: 1 A, duration max. 10 µs.

TALEXmodule STARK QLE G2 CLASSIC

STARK QLE

Product description

- Ideal for linear and panel lights
- LED system solution with outstanding system efficiency up to 123 lm/W, consisting of linear LED module and dimmable LED control gear LCAI 080/0350
- Efficiency of the module up to 136 lm/W
- High colour rendering index CRI > 80
- Small colour tolerance MacAdam 3 ①
- Small luminous flux tolerances
- Colour temperatures 3,000, 4,000 and 5,000 K
- Perfectly uniform light, even if several LED modules are used together in a line
- Self-cooling (no additional heat sink required)
- Push terminals for quick and simple wiring of LED module to LED module
- Simple installation (e.g. screws)
- Long lifetime: 50,000 hours
- 5-year system guarantee on the complete product

→ For product data sheet go to www.tridonic.com, or available on request

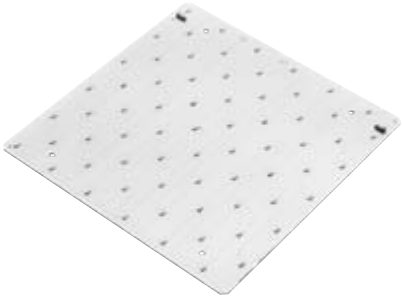

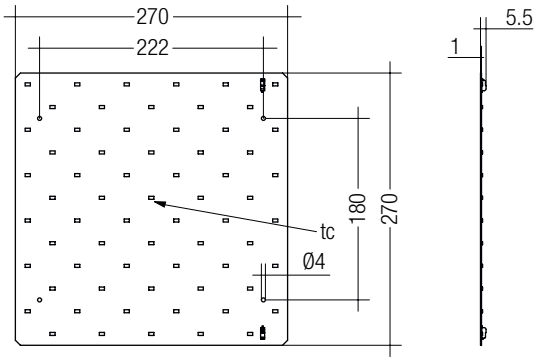

Technical data

Beam characteristic	120°
Ambient temperature ta	-30 ... +55 °C
Typ. tp point	45 °C
Risk group (EN 62471:2008)	0
Type of protection	IP00

Ordering data

Type	Article number	Colour temperature	Packaging, carton	Weight per pc.
STARK-QLE-G2-1250-830-CLA	28000142	3,000 K	40 pc(s).	0.140 kg
STARK-QLE-G2-1250-840-CLA	28000143	4,000 K	40 pc(s).	0.285 kg
STARK-QLE-G2-1250-850-CLA	28000169	5,000 K	40 pc(s).	0.135 kg

→

For standards see data sheet

For colour temperatures and tolerances see data sheet

Specific technical data

Type	Photometric code	Typ. luminous flux at tp = 25 °C ②	Typ. luminous flux at tp = 45 °C ②	Typ. forward current ② ③ ④	Typ. forward voltage ②	Typ. power consumption ②	Luminous efficacy module at tp = 25 °C	Luminous efficacy module at tp = 45 °C	Luminous efficacy system at tp = 45 °C	Colour rendering index CRI	Energy classification
Operating mode HE at 300 mA											
STARK-QLE-G2-1250-830-CLA	830/369	1,210 lm	1,190 lm	300 mA	32.5 V	9.8 W	123 lm/W	121 lm/W	111 lm/W	> 80	A+
STARK-QLE-G2-1250-840-CLA	840/369	1,280 lm	1,260 lm	300 mA	32.5 V	9.8 W	131 lm/W	129 lm/W	119 lm/W	> 80	A+
STARK-QLE-G2-1250-850-CLA	850/369	1,330 lm	1,310 lm	300 mA	32.5 V	9.8 W	136 lm/W	134 lm/W	123 lm/W	> 80	A+
Operating mode HO at 350 mA											
STARK-QLE-G2-1250-830-CLA	830/369	1,390 lm	1,370 lm	350 mA	33.0 V	11.6 W	120 lm/W	118 lm/W	109 lm/W	> 80	A+
STARK-QLE-G2-1250-840-CLA	840/369	1,470 lm	1,450 lm	350 mA	33.0 V	11.6 W	127 lm/W	125 lm/W	115 lm/W	> 80	A+
STARK-QLE-G2-1250-850-CLA	850/369	1,530 lm	1,510 lm	350 mA	33.0 V	11.6 W	132 lm/W	130 lm/W	120 lm/W	> 80	A+

① Integrated measurement over the complete module.
② Tolerance range for optical and electrical data: ±10 %.
③ Max. permissible repetitive peak current: 900 mA.
④ Max. permissible surge current: 1.5 A, duration max. 10 µs.

RoHS

TALEX(module STARK QLE 250 CLASSIC

STARK QLE

Product description

- Ideal for linear and panel lights
- LED system solution with outstanding system efficiency up to 119 lm/W, consisting of linear LED module and dimmable LED control gear LCAI 080/0350
- Efficiency of the module up to 131 lm/W
- High colour rendering index CRI > 80
- Small colour tolerance MacAdam 3 ①
- Small luminous flux tolerances
- Colour temperatures 3,000 and 4,000 K
- Perfectly uniform light, even if several LED modules are used together in a line
- Self-cooling (no additional heat sink required)
- Push terminals for quick and simple wiring
- of LED module to LED module
- Simple installation (e.g. screws)
- Long lifetime: 50,000 hours
- 5-year guarantee

→ For product data sheet go to www.tridonic.com, or available on request

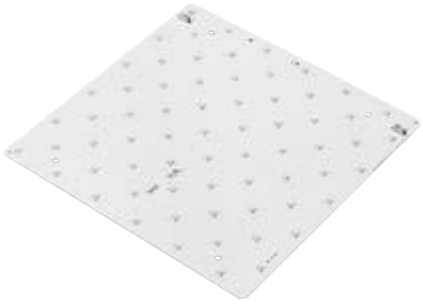

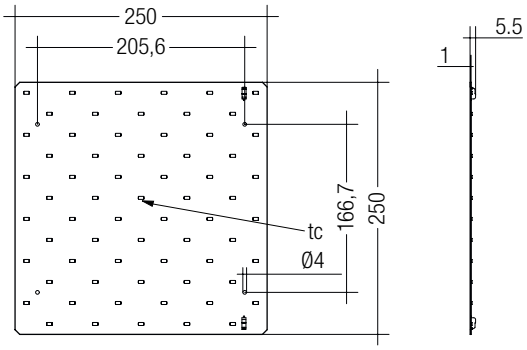

Technical data

Beam characteristic	120°
Ambient temperature ta	-30 ... +45 °C
Typ. tp point	45 °C
Risk group (EN 62471:2008)	0
Type of protection	IP00

Ordering data

Type	Article number	Colour temperature	Packaging, carton	Weight per pc.
STARK-QLE-G2-250-1250-830-CLA	**28000243**	3,000 K	40 pc(s).	0.12 kg
STARK-QLE-G2-250-1250-840-CLA	**28000244**	4,000 K	40 pc(s).	0.12 kg

→

For standards see data sheet

For colour temperatures and tolerances see data sheet

Specific technical data

Type	Photometric code	Typ. luminous flux at tp = 25 °C ②	Typ. luminous flux at tp = 45 °C ②	Typ. forward current ② ③ ④	Typ. forward voltage ②	Typ. power consumption ②	Luminous efficacy module at tp = 25 °C	Luminous efficacy module at tp = 45 °C	Luminous efficacy system at tp = 45 °C	Colour rendering index CRI	Energy classification
Operating mode HE at 300 mA											
STARK-QLE-G2-250-1250-830-CLA	830/369	1,210 lm	1,190 lm	300 mA	32.5 V	9.8 W	123 lm/W	121 lm/W	111 lm/W	> 80	A+
STARK-QLE-G2-250-1250-840-CLA	840/369	1,280 lm	1,260 lm	300 mA	32.5 V	9.8 W	131 lm/W	129 lm/W	119 lm/W	> 80	A+
Operating mode HO at 350 mA											
STARK-QLE-G2-250-1250-830-CLA	830/369	1,390 lm	1,370 lm	350 mA	33.0 V	11.6 W	120 lm/W	118 lm/W	109 lm/W	> 80	A+
STARK-QLE-G2-250-1250-840-CLA	840/369	1,470 lm	1,450 lm	350 mA	33.0 V	11.6 W	127 lm/W	125 lm/W	115 lm/W	> 80	A+

① Central measurement over the whole module.
② Tolerance range for optical and electrical data: ±10 %.
③ Max. permissible repetitive peak current: 900 mA.
④ Max. permissible surge current: 1.5 A, duration max. 10 µs.

RoHS

TALEXmodule STARK QLE CLASSIC EM

STARK QLE

Product description

- Ideal for linear and panel lights
- Combined LED module for general and emergency lighting
- Integrated separate emergency LEDs controlled by EM powerLED (2 or 4 W version)
- Efficiency of the module up to 106 lm/W
- Separat verdrahtete Notlicht-LED's
- High colour rendering index CRI > 80
- Small colour tolerance MacAdam 4 ①
- Small luminous flux tolerances
- Colour temperatures 3.000 and 4.000 K
- Perfectly uniform light, even if several LED modules are used together in a line
- Self cooling (no additional heat sink required)
- Push terminals for quick and simple wiring of LED module to LED module
- Simple installation (e.g. screws)
- Long lifetime: 50,000 hours
- 5-year system guarantee on the complete product

→ For product data sheet go to www.tridonic.com, or available on request

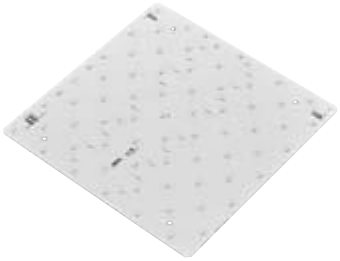

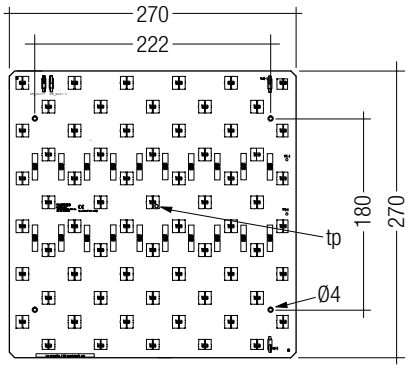

Technical data

Beam characteristic	120°
Ambient temperature ta	-30 ... +55 °C
Typ. tp point	65 °C
Risk group (EN 62471:2008)	0
Type of protection	IP00

Ordering data

Type	Article number	Colour temperature	Packaging, carton	Packaging, pallet	Weight per pc.
STARK QLE-1250-830-CLA EM	**25000817**	3,000 K	40 pc(s).	600 pc(s).	0.135 kg
STARK QLE-1250-840-CLA EM	**25000819**	4,000 K	40 pc(s).	600 pc(s).	0.135 kg

→

For standards see data sheet

For colour temperatures and tolerances see data sheet

Specific technical data

Type	Photometric code	Typ. luminous flux	Typ. forward current	Typ. forward voltage	Typ. power consumption	Luminous efficacy module	Luminous efficacy system	Colour rendering index CRI
Normalbetrieb								
STARK QLE-1250-830-CLA EM	830/4x9	1.190 lm	350 mA	33.7 V	11.8 W	> 101 lm/W	~ 93 lm/W	> 80
STARK QLE-1250-840-CLA EM	840/4x9	1.250 lm	350 mA	33.7 V	11.8 W	> 106 lm/W	~ 98 lm/W	> 80
Notlichtbetrieb – 350 mA (EM powerLED 2 W)								
STARK QLE-1250-830-CLA EM	830/4x9	230 lm	350 mA	6.2 V	–	–	–	–
STARK QLE-1250-840-CLA EM	840/4x9	245 lm	350 mA	6.2 V	–	–	–	–
Notlichtbetrieb – 700 mA (EM powerLED 4 W)								
STARK QLE-1250-830-CLA EM	830/4x9	430 lm	700 mA	6.2 V	–	–	–	–
STARK QLE-1250-840-CLA EM	840/4x9	455 lm	700 mA	6.2 V	–	–	–	–

① Central measurement over the whole module.

RoHS

TALEX(module STARK QLE G2 CLASSIC EM

STARK QLE

Product description

- Ideal for linear and panel lights
- Combined LED module for general and emergency lighting
- Integrated separate emergency LEDs controlled by EM powerLED (2 or 4 W version)
- LED system solution with outstanding system efficiency up to 119 lm/W, consisting of linear LED module and dimmable LED control gear LCAI 080/0350
- Efficiency of the module up to 131 lm/W
- High colour rendering index CRI > 80
- Small colour tolerance MacAdam 3 ①
- Small luminous flux tolerances
- Colour temperatures 3,000 and 4,000 K
- Perfectly uniform light, even if several LED modules are used together in a line
- Self-cooling (no additional heat sink required)
- Push terminals for quick and simple wiring of LED module to LED module
- Simple installation (e.g. screws)
- Long lifetime: 50,000 hours
- 5-year system guarantee on the complete product

→ For product data sheet go to www.tridonic.com, or available on request

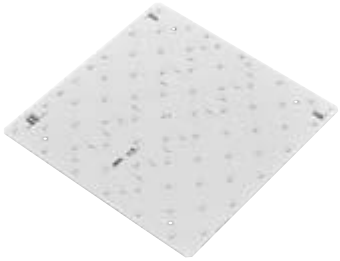

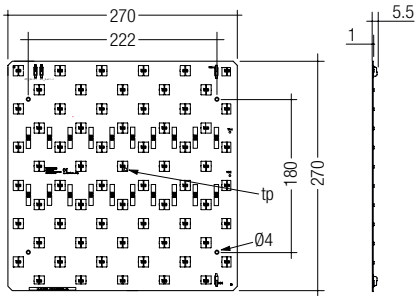

Technical data

Beam characteristic	120°
Ambient temperature ta	-30 ... +55 °C
Typ. tp point	45 °C
Risk group (EN 62471:2008)	0
Type of protection	IP00

Ordering data

Type	Article number	Colour temperature	Packaging, carton	Weight per pc.
STARK-QLE-G2-1250-830-CLA-EM	**28000167**	3,000 K	40 pc(s).	0.142 kg
STARK-QLE-G2-1250-840-CLA-EM	**28000168**	4,000 K	40 pc(s).	0.142 kg

→

For standards see data sheet

For colour temperatures and tolerances see data sheet

Specific technical data

Type	Photo-metric code	Typ. luminous flux at tp = 25 °C ②	Typ. luminous flux at tp = 45 °C ②	Typ. forward current ② ③ ④	Typ. forward voltage ②	Typ. power consump-tion ②	Luminous efficacy module at tp = 25 °C	Luminous efficacy module at tp = 45 °C	Luminous efficacy system at tp = 45 °C	Colour rendering index CRI	Energy classifi-cation
Operating mode HE at 300 mA											
STARK-QLE-G2-1250-830-CLA-EM	830/369	1,210 lm	1,190 lm	300 mA	32.5 V	9.8 W	123 lm/W	121 lm/W	111 lm/W	> 80	A+
STARK-QLE-G2-1250-840-CLA-EM	840/369	1,280 lm	1,260 lm	300 mA	32.5 V	9.8 W	131 lm/W	129 lm/W	119 lm/W	> 80	A+
Operating mode HO at 350 mA											
STARK-QLE-G2-1250-830-CLA-EM	830/369	1,390 lm	1,370 lm	350 mA	33.0 V	11.6 W	120 lm/W	118 lm/W	109 lm/W	> 80	A+
STARK-QLE-G2-1250-840-CLA-EM	840/369	1,470 lm	1,450 lm	350 mA	33.0 V	11.6 W	127 lm/W	125 lm/W	115 lm/W	> 80	A+
Emergency operation at 350 mA (EM powerLED 2 W)											
STARK-QLE-G2-1250-830-CLA-EM	830/369	275 lm	265 lm	350 mA	5.6 V	–	–	–	–	–	–
STARK-QLE-G2-1250-840-CLA-EM	840/369	285 lm	275 lm	350 mA	5.6 V	–	–	–	–	–	–
Emergency operation at 700 mA (EM powerLED 4 W)											
STARK-QLE-G2-1250-830-CLA-EM	830/369	510 lm	490 lm	700 mA	6.5 V	–	–	–	–	–	–
STARK-QLE-G2-1250-840-CLA-EM	840/369	530 lm	510 lm	700 mA	6.5 V	–	–	–	–	–	–

① Integrated measurement over the complete module.
② Tolerance range for optical and electrical data: ±10 %.
③ Max. permissible repetitive peak current: 900 mA.
④ Max. permissible surge current: 1.5 A, duration max. 10 µs.

RoHS

TALEXmodule STARK INDI CLASSIC

STARK INDI

Product description

- Ideal for linear and panel lights
- Very slim, homogenious illuminated LED module
- Indirect/direct light distribution 80/20 %
- Efficiency of the module up to 94 lm/W
- High colour rendering index CRI > 80
- Small colour tolerance MacAdam 4 ①
- Colour temperatures 3,000 and 4,000 K
- Perfectly uniform light, even if several LED modules are used together in a line
- Connectors and preassembled cables for easy wiring
- Simple installation (e.g. screws)
- Long lifetime: 50,000 hours
- 5-year system guarantee on the complete product
- Self-cooling (no additional heat sink required)

→ For product data sheet go to www.tridonic.com, or available on request

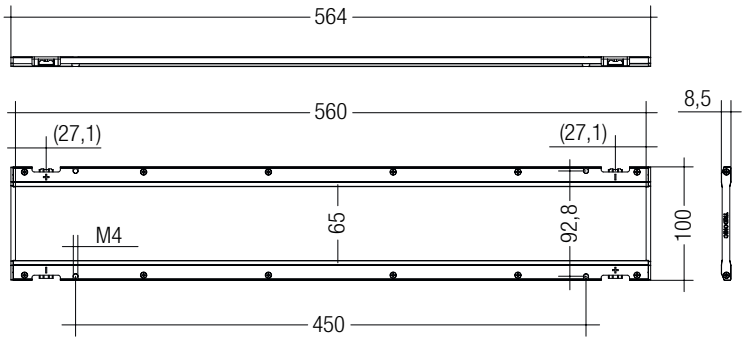

Technical data

Beam characteristic	150°
Ambient temperature ta	-20 ... +35 °C
Typ. tp point	65 °C
Risk group (EN 62471:2008)	0
Type of protection	IP00

→

For standards see data sheet

For colour temperatures and tolerances see data sheet

Ordering data

Type	Article number	Colour temperature	Packaging ②	Packaging, carton	Weight per pc.
STARK-INDI-2500-830-CLA	**28000088**	3,000 K	2 pc(s).	20 pc(s).	0.54 kg
STARK-INDI-2500-840-CLA	**28000089**	4,000 K	2 pc(s).	20 pc(s).	0.54 kg

Specific technical data

Type	Photometric code③	Typ. luminous flux at tp = 25 °C ④	Typ. luminous flux at tp = 65 °C ④	Typ. forward current ④ ⑤ ⑥	Typ. forward voltage per channel	Typ. power consumption ④	Luminous efficacy module at tp = 25 °C	Luminous efficacy module at tp = 65 °C	Luminous efficacy system at tp = 65 °C	Colour rendering index CRI	Energy classification
STARK-INDI-2500-830-CLA	830/3x9	2,550 lm	2,400 lm	350 mA	42 V	29.4 W	87 lm/W	82 lm/W	~ 74 lm/W	> 80	A
STARK-INDI-2500-840-CLA	840/3x9	2,750 lm	2,500 lm	350 mA	42 V	29.4 W	94 lm/W	85 lm/W	~ 77 lm/W	> 80	A

① Integrated measurement over the whole module.
② The TALEXmodule STARK INDI is always striped in pairs.
③ X ... in preparation.
④ Tolerance range for optical and electrical data: ±10 %.
⑤ Ripple max. 15 % of typ. forward current.
⑥ Max. permissible surge current: 1.5 A, duration max. 10 µs.

RoHS

TALEX accessory LENS O211-2 spot lens 10°

LENS

Product description

- Narrow-beam lens for TALEX module EOS P211-3 / P211-4
- For general, design and effect lighting
- As a spotlight
- High efficiency and quality of light
- Simple installation
- 10° beam angle for colours
- 20° beam angle for white
- Mounting with ready-made adhesive tape
- Material: PC/PMMA
- Colour: white / transparent

→ For product data sheet go to www.tridonic.com, or available on request

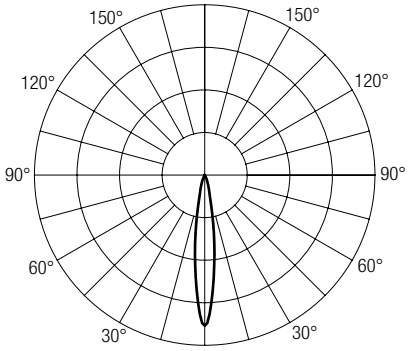

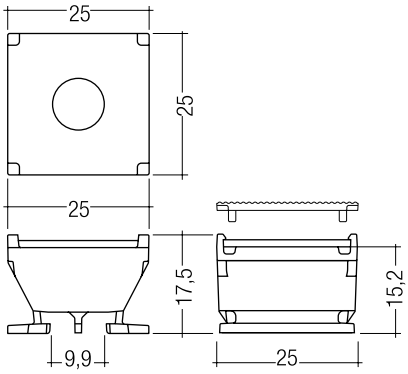

Ordering data

Type	Article number	Dimensions L x W x H	Packaging, carton	Weight per pc.
O211-2 spot lens 10°	**24139148**	25 x 25 x 17.7 mm	10 pc(s).	0.007 kg

CE RoHS

TALEXXaccessory LENS O211-2 diffusion lens

LENS

Product description

- Diffusion lens for TALEXXmodule EOS P211-2 / P211-3
- In combination with TALEXXaccessory LENS O211-2 spot lens
- No tools required for installation
- Material: PMMA
- Colour: transparent
  Asymmetrical beam angle 10° / 40°
- For wallwash applications
- As an asymmetrical spotlight
  Symmetrical beam angle 40°
- As a symmetrical spotlight

→ For product data sheet go to www.tridonic.com, or available on request

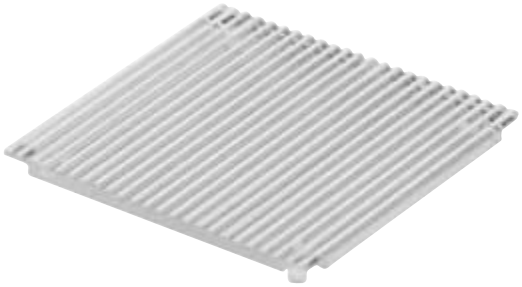

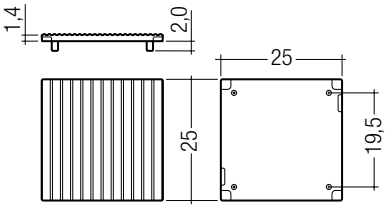

Ordering data

Type	Article number	Dimensions L x W x H	Packaging, carton	Weight per pc.
O211-2 diffusion lens 10 / 40°	**24139011**	25 x 25 x 1.4 mm	8,000 pc(s).	0.001 kg
O211-2 diffusion lens 40°	**24166036**	25 x 25 x 1.4 mm	10 pc(s).	0.001 kg

RoHS

TALEX accessory LENS 0214

LENS

Product description

- 60° lens for TALEX module EOS P214
- For general, design and effect lighting
- As a spotlight
- LV halogen replacement
- Simple installation
- Beam characteristic: 60°
- Mounting with 2 x M2.5 screws
- Material: PC

→ For product data sheet go to www.tridonic.com, or available on request

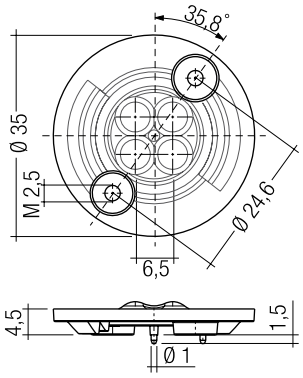

Ordering data

Type	Article number	Colour	Dimensions Ø x H	Packaging, carton	Weight per pc.
0214 lens 60°	**24139082**	Transparent	35 x 7.3 mm	10 pc(s).	0.005 kg

RoHS

OLEDmodule LUREON REP 10
LUREON REP

Product description
- High efficiency ~40 lm/W
- Colour temperature 3,850 K
- High colour rendering index CRI > 80
- Small colour tolerance MacAdam 4
- Homogeneous, non-glare and wide-area lighting
- Dimmable neutral white light
- High specific light distribution of 9,000 lm/m²
- Extremely flat design (< 3 mm)
- White diffuse surface
- Connection with cable or plug contact

→ For product data sheet go to www.tridonic.com, or available on request

Technical data

Beam characteristic	120°
Ambient temperature ta	0 ... +40 °C
Typ. tp point	40 °C
Risk group (EN 62471:2008)	0

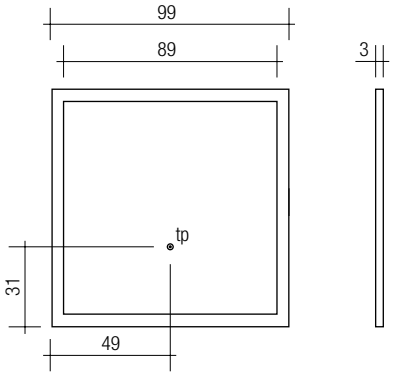

The position of the tp point is on the backside of the module in the middle of the lable.

→

For standards see data sheet

For colour temperatures and tolerances see data sheet

Ordering data

Type	Article number	Colour temperature ①	Type of connection	Packaging, carton	Weight per pc.
LUREON REP 10-40-DL	**28000052**	3,850 K	Cable	10 pc(s).	0.055 kg
LUREON REP 10-40-DC	**28000053**	3,850 K	Plug contact	10 pc(s).	0.055 kg

Specific technical data

Type	Photometric code	Luminous flux at tp = 25 °C ②	Forward current ② ③	Supply Voltage ②	Typ. power ②	Colour rendering index CRI ① ②
LUREON REP 10-40-DL	840/4x7	68 lm	285 mA	6.0 V	1.70 W	> 80
LUREON REP 10-40-DL	840/4x7	83 lm	350 mA	6.1 V	2.14 W	> 80
LUREON REP 10-40-DC	840/4x7	68 lm	285 mA	6.0 V	1.70 W	> 80
LUREON REP 10-40-DC	840/4x7	83 lm	350 mA	6.1 V	2.14 W	> 80

① Colour temperature and tolerances according to CIE 1931.
② Tolerance range for optical and electrical data: ±15 %.
③ For the valid current range, please refer to the data sheet. Exceeding the max. operating current leads to an overload of the module. This may in turn result in a significant reduction in lifetime or even in destruction.

OLEDmodule LUREON REP 10-40 DC/DL 2

LUREON REP

Product description

- Typ. forward current 230 mA
- High efficiency > 50 lm/W
- Colour temperature 4,000 K
- High colour rendering index CRI > 85
- Small colour tolerance MacAdam 4
- Homogeneous, non-glare and wide-area lighting
- Dimmable neutral white light
- High specific light distribution of 12,000 lm/m²
- Extremely flat design (< 3 mm)
- White diffuse surface
- Connection with cable or plug contact

→ For product data sheet go to www.tridonic.com, or available on request

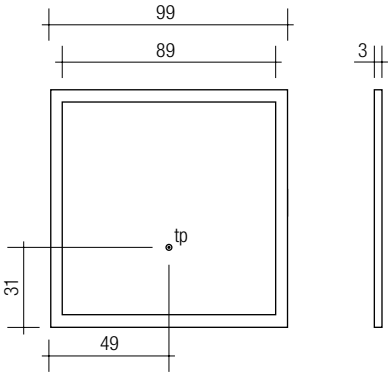

The position of the tp point is on the backside of the module in the middle of the lable.

Technical data

Beam characteristic	120°
Ambient temperature ta	0 ... +40 °C
Typ. tp point	40 °C
Risk group (EN 62471:2008)	0

→

For standards see data sheet

For colour temperatures and tolerances see data sheet

Ordering data

Type	Article number	Colour temperature ①	Type of connection	Packaging, carton	Weight per pc.
LUREON REP 10-40-DL 2	**28000249**	4,000 K	Cable	10 pc(s).	0.2 kg
LUREON REP 10-40-DC 2	**28000250**	4,000 K	Plug contact	10 pc(s).	0.2 kg

Specific technical data

Type	Photometric code	Luminous flux at tp = 25 °C ②	Forward current ② ③	Supply Voltage ②	Typ. power ②	Colour rendering index CRI ①
LUREON REP 10-40-DL 2	840/4x7	73 lm	230 mA	6.1 V	1.4 W	> 85
LUREON REP 10-40-DL 2	840/4x7	79 lm	250 mA	6.2 V	1.5 W	> 85
LUREON REP 10-40-DL 2	840/4x7	109 lm	350 mA	6.5 V	2.1 W	> 85
LUREON REP 10-40-DC 2	840/4x7	73 lm	230 mA	6.1 V	1.4 W	> 85
LUREON REP 10-40-DC 2	840/4x7	79 lm	250 mA	6.2 V	1.5 W	> 85
LUREON REP 10-40-DC 2	840/4x7	109 lm	350 mA	6.5 V	2.1 W	> 85

① Colour temperature and tolerances according to CIE 1931.
② Tolerance range for optical and electrical data: ±15 %.
③ For the valid current range, please refer to the current related charts. Exceeding the max. operating current leads to an overload of the module. This may in turn result in a significant reduction in lifetime or even in destruction.

NEW

OLEDmodule LUREON REP 20w5-40 DL/DC

LUREON REP

Product description

- Typ. forward current 230 mA
- High efficiency > 50 lm/W
- Colour temperature 4,000 K
- High colour rendering index (CRI > 90)
- Small colour tolerance MacAdam 4
- Homogeneous, non-glare and wide-area lighting
- Dimmable neutral white light
- High specific light distribution of 12,000 lm/m²
- Extremely flat design (< 3 mm)
- White diffuse surfaces
- Connection with cable or plug contact

→ For product data sheet go to www.tridonic.com, or available on request

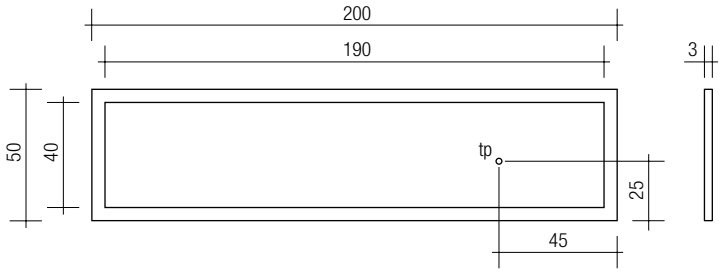

The position of the tp point is on the backside of the module in the middle of the lable.

Technical data

Beam characteristic	120°
Ambient temperature ta	0 ... +40 °C
Typ. tp point	40 °C
Risk group (EN 62471:2008)	0

→

For standards see data sheet

For colour temperatures and tolerances see data sheet

Ordering data

Type	Article number	Colour temperature ①	Type of connection	Packaging, carton	Weight per pc.
LUREON REP 20w5-40-DL	**28000318**	4,000 K	Cable	10 pc(s).	0.055 kg
LUREON REP 20w5-40-DC	**28000317**	4,000 K	Plug contact	10 pc(s).	0.055 kg

Specific technical data

Type	Photometric code	Typ. Luminous flux ②	Forward current ② ③	Supply Voltage ②	Typ. power ②	Colour rendering index CRI ① ②
OLEDmodule LUREON REP 20w5-40 DL/DC	940/4x7	70 lm	230 mA	5.8 V	1.35 W	> 90
OLEDmodule LUREON REP 20w5-40 DL/DC	940/4x7	76 lm	250 mA	5.9 V	1.50 W	> 90
OLEDmodule LUREON REP 20w5-40 DL/DC	940/4x7	104 lm	350 mA	6.0 V	2.10 W	> 90

① Colour temperature and tolerances according to CIE 1931.
② Tolerance range for optical and electrical data: ±15 %.
③ For the valid current range, please refer to the current related charts. Exceeding the max. operating current leads to an overload of the module. This may in turn result in a significant reduction in lifetime or even in destruction.

OLEDmodule LUREON REM 10-30 DL

LUREON REM

Product description

- Typ. forward current 170 mA
- High efficiency ~40 lm/W
- Colour temperature 2,800 K
- High colour rendering index CRI ~80
- Small colour tolerance MacAdam 4
- Homogeneous, non-glare and wide-area lighting
- Dimmable warm white light
- High specific light distribution of 9,000 lm/m²
- Extremely flat design (< 3 mm)
- White diffuse surface
- Connection with cable

→ For product data sheet go to www.tridonic.com, or available on request

Technical data

Beam characteristic	120°
Ambient temperature ta	0 ... +40 °C
Typ. tp point	40 °C
Risk group (EN 62471:2008)	0

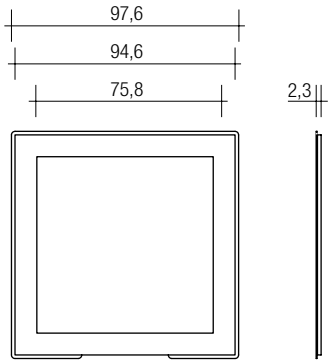

The position of the tp point is on the backside of the module in the middle of the lable.

→

For standards see data sheet

For colour temperatures and tolerances see data sheet

Ordering data

Type	Article number	Type of connection	Packaging, carton	Weight per pc.
LUREON REM 10-30-DL	**28000061**	Cable	10 pc(s).	0.043 kg

Specific technical data

Type	Photometric code	Luminous flux at tp = 25 °C ①	Forward current	Supply Voltage ①	Typ. power ①	Colour rendering index CRI ②
LUREON REM 10-30-DL	828/4x7	41 lm	120 mA	7.8 V	0.9 W	~80
LUREON REM 10-30-DL	828/4x7	57 lm	170 mA	8.0 V	1.4 W	~80
LUREON REM 10-30-DL	828/4x7	66 lm	200 mA	8.1 V	1.6 W	~80

① Tolerance range for optical and electrical data: ±15 %.
② Colour temperature and tolerances according to CIE 1931.

OLEDmodule LUREON REM 15-30 DL

LUREON REM

Product description

- Typ. forward current 450 mA
- High efficiency ~40 lm/W
- Colour temperature 2,800 K
- High colour rendering index CRI ~80
- Small colour tolerance MacAdam 4
- Homogeneous, non-glare and wide-area lighting
- Dimmable warm white light
- High specific light distribution of 9,000 lm/m²
- Extremely flat design (< 3 mm)
- White diffuse surface
- Connection with cable

→ For product data sheet go to www.tridonic.com, or available on request

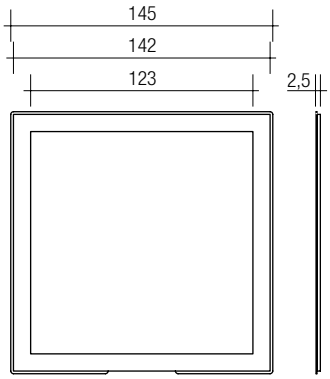

The position of the tp point is on the backside of the module in the middle of the lable.

Technical data

Beam characteristic	120°
Ambient temperature ta	0 ... +40 °C
Typ. tp point	40 °C
Risk group (EN 62471:2008)	0

→

For standards see data sheet

For colour temperatures and tolerances see data sheet

Ordering data

Type	Article number	Type of connection	Packaging, carton	Weight per pc.
LUREON REM 15-30-DL	**28000062**	Cable	10 pc(s).	0.107 kg

Specific technical data

Type	Photometric code	Luminous flux at tp = 25 °C ①	Forward current	Supply Voltage ①	Typ. power ①	Colour rendering index CRI ②
LUREON REM 15-30-DL	828/4x7	109 lm	350 mA	7.8 V	2.7 W	~80
LUREON REM 15-30-DL	828/4x7	138 lm	450 mA	8.0 V	3.6 W	~80
LUREON REM 15-30-DL	828/4x7	153 lm	500 mA	8.1 V	4.0 W	~80

① Tolerance range for optical and electrical data: ±15 %.
② Colour temperature and tolerances according to CIE 1931.

OLEDmodule LUREON REM 29w9-30 DL

LUREON REM

Product description

- Typ. forward current 580 mA
- High efficiency ~40 lm/W
- Colour temperature 2,800 K
- High colour rendering index CRI ~80
- Small colour tolerance MacAdam 4
- Homogeneous, non-glare and wide-area lighting
- Dimmable warm white light
- High specific light distribution of 9,000 lm/m²
- Extremely flat design (< 3 mm)
- White diffuse surface
- Connection with cable

→ For product data sheet go to www.tridonic.com, or available on request

Technical data

Beam characteristic	120°
Ambient temperature ta	0 ... +40 °C
Typ. tp point	40 °C
Risk group (EN 62471:2008)	0

For standards see data sheet

For colour temperatures and tolerances see data sheet

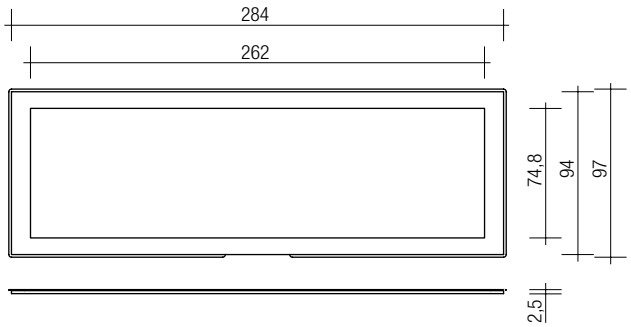

The position of the tp point is on the backside of the module in the middle of the lable.

Ordering data

Type	Article number	Type of connection	Packaging, carton	Weight per pc.
LUREON REM 29W9-30-DL	**28000063**	Kabel	10 Stk.	0,143 kg

Specific technical data

Type	Photometric code	Luminous flux at tp = 25 °C ①	Forward current	Supply Voltage ①	Typ. power ①	Colour rendering index CRI ②
LUREON REM 29W9-30-DL	828/4x7	106 lm	350 mA	7.6 V	3.6 W	~80
LUREON REM 29W9-30-DL	828/4x7	172 lm	580 mA	8.0 V	4.6 W	~80
LUREON REM 29W9-30-DL	828/4x7	206 lm	700 mA	8.1 V	5.6 W	~80

① Tolerance range for optical and electrical data: ±15 %.
② Colour temperature and tolerances according to CIE 1931.

Product overview luxCONTROL lighting control systems

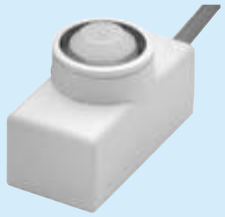

SMART sensors
Intelligent energy savings

Thanks to the digital SMART interface it is possible to connect daylight, presence and remote control sensors easily and directly to the ballast. In this way we can guarantee maximum energy savings and maximum comfort.

SWITCH sensor
Simple solutions with impressive functionality

These sensors react to movement and light, switching the light on and off. They can be used either for direct switching of control gear or in conjunction with the TRIDONIC corridorFUNCTION. In conjunction with the corridorFUNCTION up to 20 devices can be switched by one sensor.

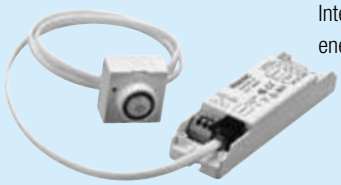

basicDIM
Intelligent network – and maximum energy savings

The three most important requirements that modern lighting management systems have to meet are visual comfort, suitability to the tasks being performed and energy efficiency. With just a small addition you can turn your luminaire into an intelligent system. Compact and with low stand-by losses, it will then save you energy. Round the clock.

comfortDIM
Comfortable lighting. For unrestricted freedom

Our comfortDIM light management system is based on two principles: comfort and independence. Your projects benefit from simplicity and maximum flexibility. At start-up and beyond.

DSI-Aktoren
Simple solutions with a huge impact

With DSI actuators appropriate light management solutions can be setup quickly and reliably. Even large lighting systems can be efficiently designed.

RoHS

SMART Sensor 5D 19f

Ambient light sensor for lighting control

Product description

- Optional ambient light sensor for PCA EXCEL one4all, PCA ECO and PCA BASIC devices from the x!tec II generation
- With ambient light dependent control
- Simple setting of the set-point via integrated momentary-action switch at the sensor
- Compact dimensions for luminaire installation
- Simple cable connection to the ballast via SMART interface
- Power supply via ballast
- Max. installation height 5 m

→ For product data sheet go to www.tridonic.com, or available on request

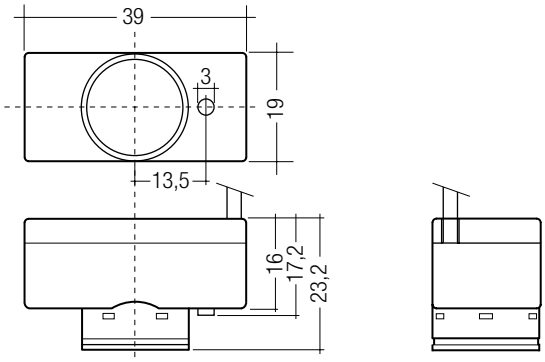

Technical data

Supply via	SMART interface
Current draw	1 mA from SMART interface
Operating temperature	0 ... +70 °C
Storage temperature ts	-20 ... +75 °C
Type of protection	IP20
Max. casing temperature tc	73 °C

→

For standards see data sheet

For wiring diagrams and installation examples see data sheet

Ordering data

Type	Article number	Packaging, carton
SMART Sensor 5D 19f	**86459169**	20 pc(s).

Specific technical data

Type	Detection			Max. cable length	Control output (devices)
	Light detection angle symmetric	Light measurement at the sensor head ①	Illuminance (factory default) ②		
SMART Sensor 5D 19f	42 °	40 – 1,000 lx	500 lx	0.8 m	1

① The measured value at the sensor head corresponds to approx. 60 to 3,000 lux on the surface measured.
② The illuminance is set for a room defined by Tridonic. Depending on the actual room (reflectance) the measured illuminance may deviate from this value. The illuminance should therefore be checked in the installation and adjusted if necessary.

RoHS

ACCES-SORIES

SMART Sensor Cover Frame

Product description

- Cover frame for attaching the sensor directly to the luminaire casing

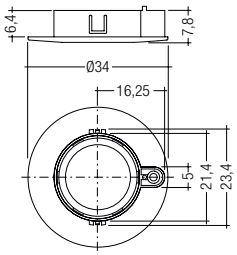

Ordering data

Type	Article number	Packaging, bag	Packaging, carton
SMART Mounting Ring 5D(P)	86459427	50 pc(s).	200 pc(s).

ACCES-SORIES

SMART Sensor T5 / T8 Clip + Cap

Product description

- Clip for mounting the sensor directly to the lamp and cover to protect against indirect light

T5 Clip + Cap

T8 Clip + Cap

Ordering data

Type	Article number	Packaging, bag	Packaging, carton
SMART Sensor T5 Clip + Cap	86459499	10 pc(s).	200 pc(s).
SMART Sensor T8 Clip + Cap	86459500	10 pc(s).	200 pc(s).

ACCES-SORIES

SMART Sensor Cap

Product description

- Cover to protect against indirect light

Ordering data

Type	Article number	Packaging, bag	Packaging, carton
SMART Sensor Cap	86459501	50 pc(s).	500 pc(s).

RoHS

SMART Sensor 5DP 19f

Ambient light sensor and presence detector for lighting control

Product description

- Optional ambient light sensor and motion detector for PCA EXCEL one4all devices from the x!tec II generation
- Simple setting of the set-point via integrated momentary-action switch at the sensor
- Compact dimensions for luminaire installation
- Simple cable connection to the ballast via SMART interface
- Power supply via ballast
- Lighting control and presence detection can be deactivated
- Individual adjustment of the parameters with configuration software
- Max. installation height 5 m

→ For product data sheet go to www.tridonic.com, or available on request

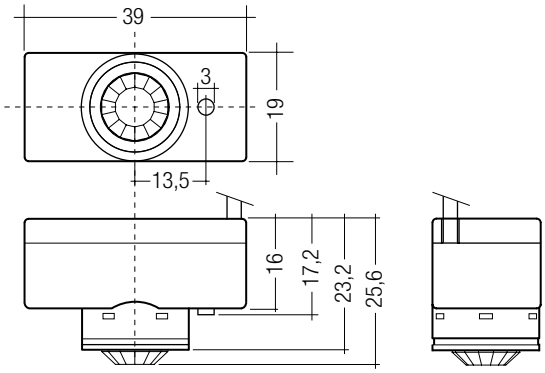

Technical data

Supply via	SMART interface
Current draw	1 mA from SMART interface
Operating temperature	0 ... +60 °C
Storage temperature ts	-20 ... +65 °C
Type of protection	IP20
Max. casing temperature tc	63 °C

→

For standards see data sheet

For wiring diagrams and installation examples see data sheet

Ordering data

Type	Article number	Packaging, carton
SMART Sensor 5DP 19f	**86459170**	20 pc(s).

Specific technical data

Type	Detection				Max. cable length	Control output (devices)
	Light detection angle asymmetric	Light measurement at the sensor head ①	Illuminance (factory default) ②	Motion detection angle symmetric		
SMART Sensor 5DP 19f	31 °	40 – 1,000 lx	500 lx	92 °	0.8 m	1

① The measured value at the sensor head corresponds to approx. 60 to 3,000 lux on the surface measured.
② The illuminance is set for a room defined by Tridonic. Depending on the actual room (reflectance) the measured illuminance may deviate from this value. The illuminance should therefore be checked in the installation and adjusted if necessary.

RoHS

ACCES-SORIES

SMART Sensor Cover Frame

Product description

- Cover frame for attaching the sensor directly to the luminaire casing

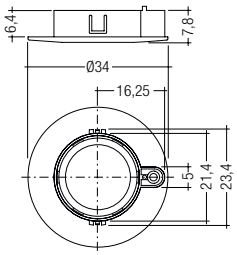

Ordering data

Type	Article number	Packaging, bag	Packaging, carton
SMART Mounting Ring 5D(P)	86459427	50 pc(s).	200 pc(s).

ACCES-SORIES

SMART Sensor T5 / T8 Clip + Cap

Product description

- Clip for mounting the sensor directly to the lamp and cover to protect against indirect light

T5 Clip + Cap

T8 Clip + Cap

Ordering data

Type	Article number	Packaging, bag	Packaging, carton
SMART Sensor T5 Clip + Cap	86459499	10 pc(s).	200 pc(s).
SMART Sensor T8 Clip + Cap	86459500	10 pc(s).	200 pc(s).

ACCES-SORIES

SMART Sensor Cap

Product description

- Cover to protect against indirect light

Ordering data

Type	Article number	Packaging, bag	Packaging, carton
SMART Sensor Cap	86459501	50 pc(s).	500 pc(s).

CE RoHS

SMART Sensor 5DPI 19fe

Ambient light sensor and presence detector for lighting control

Product description

- Optional ambient light sensor and presence detector for PCA EXCEL one4all devices from the x!tec II generation
- Can be remote controlled
- Compact dimensions for luminaire installation
- Simple cable connection to the ballast via SMART interface
- Power supply via ballast
- Lighting control and presence detection can be deactivated
- Individual adjustment of the parameters with configuration software
- Optional with corridorFUNCTION profile
- Optional connection with second ballast possible via accessory cable
- Max. installation height 5 m

→ For product data sheet go to www.tridonic.com, or available on request

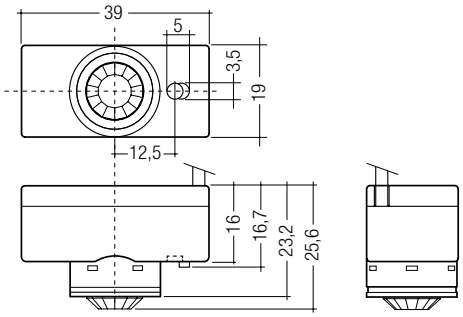

Technical data

Supply via	SMART interface
Current draw	1 mA from SMART interface
Operating temperature	0 ... +60 °C
Storage temperature ts	-20 ... +65 °C
Type of protection	IP20
Max. casing temperature tc	63 °C

→

For standards see data sheet

For wiring diagrams and installation examples see data sheet

Ordering data

Type	Article number	Packaging, carton
SMART Sensor 5DPI 19fe	**86459545**	20 pc(s).
SMART Sensor 5DPI 19fe cF n.o.	**86459552**	20 pc(s).
SMART Sensor 5DPI 19fe cF 01	**86459550**	20 pc(s).
SMART Sensor 5DPI 19fe cF 30	**86459551**	20 pc(s).

Specific technical data

Type	Detection				Max. cable length	Control output (devices)	corridorFUNCTION profile
	Light detection angle asymmetric	Light measurement at the sensor head ①	Illuminance (factory default) ②	Motion detection angle symmetric			
SMART Sensor 5DPI 19fe	31 °	40 – 1,000 lx	500 lx	92 °	0.8 m	2	–
SMART Sensor 5DPI 19fe cF n.o.	31 °	40 – 1,000 lx	500 lx	92 °	0.8 m	2	never of
SMART Sensor 5DPI 19fe cF 01	31 °	40 – 1,000 lx	500 lx	92 °	0.8 m	2	switch-off 1 minute
SMART Sensor 5DPI 19fe cF 30	31 °	40 – 1,000 lx	500 lx	92 °	0.8 m	2	switch-off 30 minutes

① The measured value at the sensor head corresponds to approx. 60 to 3,000 lux on the surface measured.
② The illuminance is set for a room defined by Tridonic. Depending on the actual room (reflectance) the measured illuminance may deviate from this value. The illuminance should therefore be checked in the installation and adjusted if necessary.

RoHS

ACCES-SORIES

SMART Sensor Cover Frame

Product description

- Cover frame for attaching the sensor directly to the luminaire casing

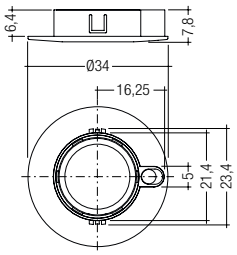

Ordering data

Type	Article number	Packaging, bag	Packaging, carton
SMART Mounting Ring 5DPI	86459428	50 pc(s).	200 pc(s).

ACCES-SORIES

SMART Sensor T5 / T8 Clip + Cap

Product description

- Clip for mounting the sensor directly to the lamp and cover to protect against indirect light

T5 Clip + Cap

T8 Clip + Cap

Ordering data

Type	Article number	Packaging, bag	Packaging, carton
SMART Sensor T5 Clip + Cap	86459499	10 pc(s).	200 pc(s).
SMART Sensor T8 Clip + Cap	86459500	10 pc(s).	200 pc(s).

ACCES-SORIES

SMART Sensor Cap

Product description

- Cover to protect against indirect light

Ordering data

Type	Article number	Packaging, bag	Packaging, carton
SMART Sensor Cap	86459501	50 pc(s).	500 pc(s).

RoHS

ACCES-SORIES

IR-SMART Controller

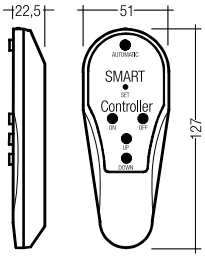

Product description

- Optional infra-red remote control
- Switching on and off (On/Off button))
- Dimming (Up/Down button)
- Activation of automatic lighting control (Automatic button)
- Setting the threshold control point (Set button)

Ordering data

Type	Article number	Packaging, carton	Weight per pc.
DSI-SMART Controller	86451922	1 pc(s).	0.075 kg

RoHS

ACCES-SORIES

SMART Sensor Extension Cable

Product description

- Cable for optional connection of the sensor with a second ballast
- Only use with SMART Sensor 19fe

Ordering data

Type	Article number	Length	Packaging, carton
SMART Sensor Extension Cable	86459176	0.8 m	1,500 pc(s).

RoHS

SMART Sensor 10DPI 19fe

Ambient light sensor and presence detector for lighting control

Product description

- Optional ambient light sensor and motion detector for PCA EXCEL one4all devices from the x!tec II generation
- Can be remote controlled
- Max. installation height 10 m
- Compact dimensions for luminaire installation
- Simple cable connection to the ballast via SMART interface
- Power supply via ballast
- Lighting control and presence detection can be deactivated
- Individual adjustment of the parameters with configuration software
- Optinal with corridorFUNCTION profile
- Optional connection with second ballast possible via accessory cable

→ For product data sheet go to www.tridonic.com, or available on request

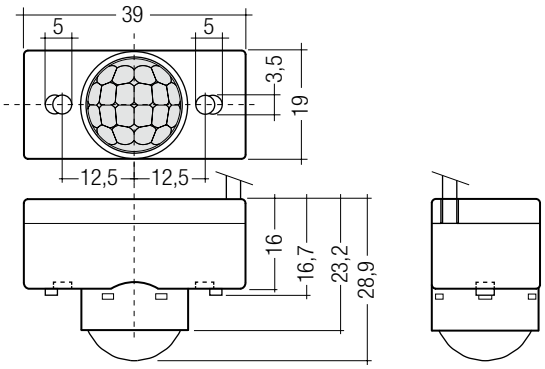

Technical data

Supply via	SMART interface
Current draw	1 mA from SMART interface
Operating temperature	0 ... +60 °C
Storage temperature ts	-20 ... +65 °C
Type of protection	IP20
Max. casing temperature tc	63 °C

→

For standards see data sheet

For wiring diagrams and installation examples see data sheet

Ordering data

Type	Article number	Packaging, carton
SMART Sensor 10DPI 19fe	**86459546**	20 pc(s).
SMART Sensor 10DPI 19fe cF n.o.	**86459549**	20 pc(s).
SMART Sensor 10DPI 19fe cF 01	**86459547**	20 pc(s).
SMART Sensor 10DPI 19fe cF 30	**86459548**	20 pc(s).

Specific technical data

Type	Detection				Max. cable length	Control output (devices)	corridorFUNCTION profile
	Light detection angle symmetric	Light measurement at the sensor head ①	Illuminance (factory default) ②	Motion detection angle symmetric			
SMART Sensor 10DPI 19fe	38 °	40 – 1,000 lx	500 lx	93 °	0.8 m	2	–
SMART Sensor 10DPI 19fe cF n.o.	38 °	40 – 1,000 lx	500 lx	93 °	0.8 m	2	never of
SMART Sensor 10DPI 19fe cF 01	38 °	40 – 1,000 lx	500 lx	93 °	0.8 m	2	switch-off 1 minute
SMART Sensor 10DPI 19fe cF 30	38 °	40 – 1,000 lx	500 lx	93 °	0.8 m	2	switch-off 30 minutes

① The measured value at the sensor head corresponds to approx. 60 to 3,000 lux on the surface measured.
② The illuminance is set for a room defined by Tridonic. Depending on the actual room (reflectance) the measured illuminance may deviate from this value. The illuminance should therefore be checked in the installation and adjusted if necessary.

RoHS

ACCES-SORIES

IR-SMART Controller

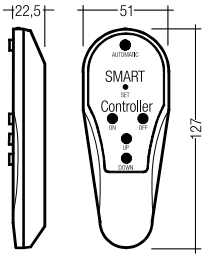

Product description

- Optional infra-red remote control
- Switching on and off (On/Off button))
- Dimming (Up/Down button)
- Activation of automatic lighting control (Automatic button)
- Setting the threshold control point (Set button)

Ordering data

Type	Article number	Packaging, carton	Weight per pc.
DSI-SMART Controller	86451922	1 pc(s).	0.075 kg

RoHS

ACCES-SORIES

SMART Sensor Extension Cable

Product description

- Cable for optional connection of the sensor with a second ballast
- Only use with SMART Sensor 19fe

Ordering data

Type	Article number	Length	Packaging, carton
SMART Sensor Extension Cable	86459176	0.8 m	1,500 pc(s).

ACCES-SORIES

SMART Sensor T5 / T8 Clip + Cap

Product description

- Clip for mounting the sensor directly to the lamp and cover to protect against indirect light

T5 Clip + Cap

T8 Clip + Cap

Ordering data

Type	Article number	Packaging, bag	Packaging, carton
SMART Sensor T5 Clip + Cap	**86459499**	10 pc(s).	200 pc(s).
SMART Sensor T8 Clip + Cap	**86459500**	10 pc(s).	200 pc(s).

ACCES-SORIES

SMART Sensor Cap

Product description

- Cover to protect against indirect light

Ordering data

Type	Article number	Packaging, bag	Packaging, carton
SMART Sensor Cap	**86459501**	50 pc(s).	500 pc(s).

RoHS

Smart SWITCH II

Automatic switching based on motion and light level

Product description

- Motion detector for luminaire installation
- For automatic on/off switching of luminaires with electronic ballasts
- “Bright-Out” function: luminaire is not switched on if there is adequate brightness
- Maximum of 1 sensor possible
- Low-profile casing (21 x 30 mm)
- For a maximum of 2 ECGs
- Delay time and light value for the “Bright-Out” function can be set via 2 potentiometers

→ For product data sheet go to www.tridonic.com, or available on request

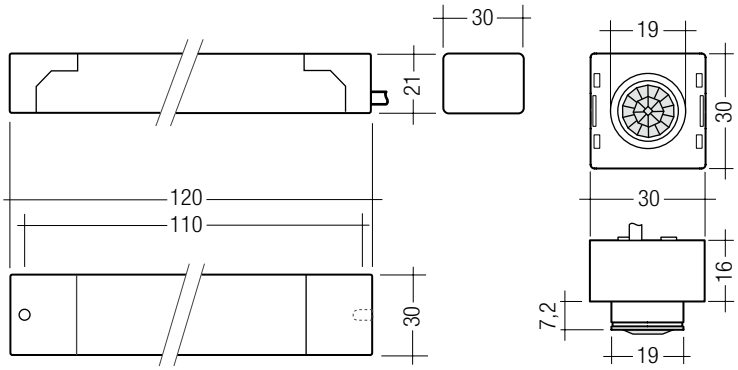

Technical data

Rated supply voltage	220 – 240 V
Mains frequency	50 / 60 Hz
Power	7.5 VA
Output, standby	0.6 W
Ambient temperature ta	0 ... +60 °C

For standards see data sheet

For wiring diagrams and installation examples see data sheet

Ordering data

Type	Article number	Packaging, carton	Weight per pc.
Smart SWITCH II	**86458452**	10 pc(s).	0.055 kg
Smart SWITCH strain relief	**86458246**	10 pc(s).	0.055 kg

Specific technical data

Type	Inputs		Output, relay (L‘)			
	Max. Smart SWITCH sensors	Sensor cable length	L‘ (switched line)	Max. switching output (e.g. PCA)	Max. switching output [W]	Max. switching output [VA]
Smart SWITCH II	1	0.50 m (can be extended to 2 m max.)	220 – 240 V	2	500 W	200 VA
Smart SWITCH strain relief	1	0.25 m (can be extended to 2 m max.)	220 – 240 V	2	500 W	200 VA

RoHS

NEW

SWITCH Sensor HF 5BP

Automatic switching based on motion and light level

Product description

- Motion detector for luminaire installation
- Motion detection through glass and thin materials (except metal)
- For automatic on/off switching of electronic ballasts with corridorFUNCTION
- "Bright-Out" function: luminaire is not switched on if there is adequate brightness
- Delay time, detection range and light value for the "Bright-Out" function can be set via 3 potentiometers
- Max. installation height 5 m
- Infinitely variable range (0.5 - 5.0 m)
- 5-year guarantee

→ For product data sheet go to www.tridonic.com, or available on request

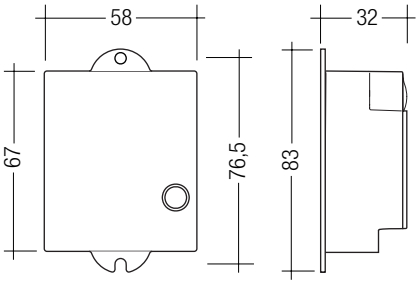

Technical data

Rated supply voltage	230 – 240 V
Mains frequency	50 / 60 Hz
Power	< 0.5 W
Ambient temperature ta	-20 ... +75 °C
Storage temperature ts	-20 ... +75 °C
Humidity	min. 5 ... max. 85 % at 30 °C
Type of protection	IP20
Housing material	PC, halogen-free
Housing colour	RAL 9016

Ordering data

Type	Article number	Packaging, carton	Weight per pc.
SWITCH Sensor HF 5BP	**28000086**	4 pc(s).	0.079 kg

→

For standards see data sheet

For wiring diagrams and installation examples see data sheet

Specific technical data

Type	Dimensions L x W x H	Detection			Output, relay (L')	
		Detection angle	Transmission power	Frequency	L' (switched line)	Switching output (at 240 V AC max.) ①
SWITCH Sensor HF 5BP	83 x 58 x 32 mm	160°	1 mW	5.8 GHz	220 – 240 V	1,000 W / 4 A (ohmic load)

① Inductive: 500 VA, cos phi > 0.5; capacitive: max. 2 ECG (à 54 W, max. 50 µF); inrush current: max. 160 A / 200 µs; up to 100.000 switching cycles.

CE RoHS

basicDIM RCL

Control module for combination with ambient light sensor, momentary-action switch and presence sensor

Product description

- Digital control module with ambient light sensor, motion detector and momentary-action switch input
- Control module for controlling up to 25 DSI ballasts
- Dimming, switching and saving of the daylight set value via single momentary-action switch; multiple switches can be connected in parallel
- Saving of the daylight set value lockable
- With the Link Line it is possible to connect up to 20 basicDIM RCL's to one system (synchronisation of motion detection) ①
- Mode can be selected via rotary switch
- Input for a maximum of 4 basicDIM sensors
- 5-year guarantee

→ For product data sheet go to www.tridonic.com, or available on request

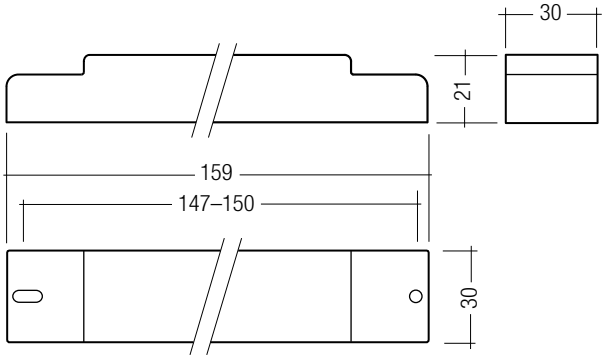

Technical data

Rated supply voltage	220 – 240 V
Mains frequency	50 / 60 Hz
Power	1.5 W
Operating temperature	0 ... +60 °C
Storage temperature ts	-25 ... +70 °C
Type of protection	IP20

Ordering data

Type	Article number	Packaging, carton
basicDIM RCL	**86458998**	10 pc(s).

→

For standards see data sheet

For wiring diagrams and installation examples see data sheet

Specific technical data

Type	Inputs			Outputs			Link Line	
	Dimming momentary-action switch	Max. basicDIM sensors	Max. sensor line length	Digital control line DSI	Control output per physical output DSI (devices)	Dimming range	Voltage DC at correct mains wiring ②	Number of combinable modules
basicDIM RCL	single	4	10 m	1	25	1 – 100 %	15 V	20

① To ensure the functionality of the Link Line the phase and the neutral wires have to be connected correctly.
② If reverse polarity is applied to mains, mains voltage is at the Link Line and the function of Link Line will be affected.

RoHS

ACCES-SORIES

basicDIM Sensor 5DP 19f

Ambient light sensor and motion detector

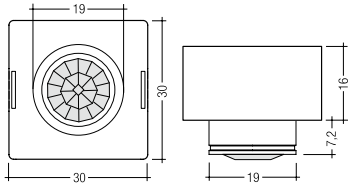

Product description

- Optional ambient light sensor and motion detector for basicDIM RCL and basicDIM RCL DBC
- Compact low-profile dimensions for luminaire installation
- With push-in terminal
- 5-year guarantee

Technical data

Light measurement at the sensor head ①	5 – 500 lx

Ordering data

Type	Article number	Packaging, carton	Weight per pc.
basicDIM 5DP 19f	**86459173**	50 pc(s).	0.06 kg

① The measured value at the sensor head corresponds to approx. 10 to 1,500 lux on the surface measured.

RoHS

ACCES-SORIES

basicDIM Sensor 5DP 41rc

Ambient light sensor and motion detector

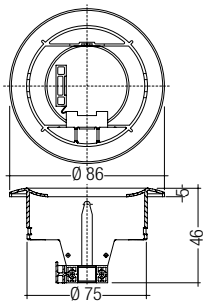

Product description

- Optional ambient light sensor and motion detector for basicDIM RCL and basicDIM RCL DBC
- Ceiling installation
- 5-year guarantee

Technical data

Light measurement at the sensor head ①	5 – 500 lx

Ordering data

Type	Article number	Packaging, carton	Weight per pc.
basicDIM Sensor 5DP 41rc	**86459115**	20 pc(s).	0.06 kg

① The measured value at the sensor head corresponds to approx. 10 to 1,500 lux on the surface measured.

RoHS

ACCES-SORIES

basicDIM Sensor 5DP 41rs

Ambient light sensor and motion detector

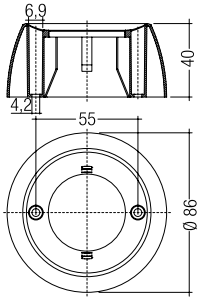

Product description

- Optional ambient light sensor and motion detector for basicDIM RCL and basicDIM RCL DBC
- Surface mounting
- 5-year guarantee

Technical data

Light measurement at the sensor head ①	5 – 500 lx

Ordering data

Type	Article number	Packaging, carton	Weight per pc.
basicDIM Sensor 5DP 41rs	**86459116**	20 pc(s).	0.06 kg

① The measured value at the sensor head corresponds to approx. 10 to 1,500 lux on the surface measured.

RoHS

ACCES-SORIES

Strain-relief set

Product description

- 5-year guarantee

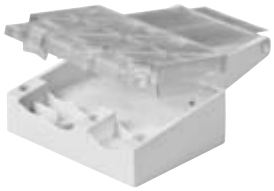

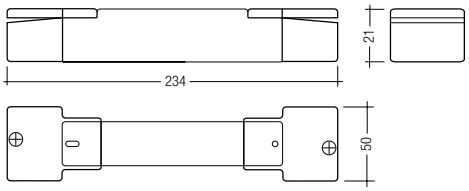

Ordering data

Type	Article number	Packaging, carton
Strain-relief set	**86458689**	10 pc(s).

RoHS

ACCES-SORIES

Accessories for basicDIM Sensor 5DP 19f

Product description

- Optional for increasing the detection range of the motion detector for basicDIM Sensor 5DP 19f
- 5-year guarantee

Ordering data

Type	Article number	Packaging, carton	Weight per pc.
smartDIM mirror	**86454640**	50 pc(s).	0.002 kg

CE RoHS

basicDIM RCL DBC

Control module for combination with ambient light sensor, momentary-action switch and presence sensor

Product description

- Digital control module with ambient light sensor, motion detector and momentary-action switch input
- DALI Broadcast control module for controlling up to 10 DALI ballasts
- Dimming, switching and saving of the daylight set value via single momentary-action switch; multiple switches can be connected in parallel
- Saving of the daylight set value lockable
- With the Link Line it is possible to connect up to 20 basicDIM RCL DBC's to one system (synchronisation of motion detection) ①
- Mode can be selected via rotary switch
- Input for a maximum of 4 basicDIM sensors
- 5-year guarantee

→ For product data sheet go to www.tridonic.com, or available on request

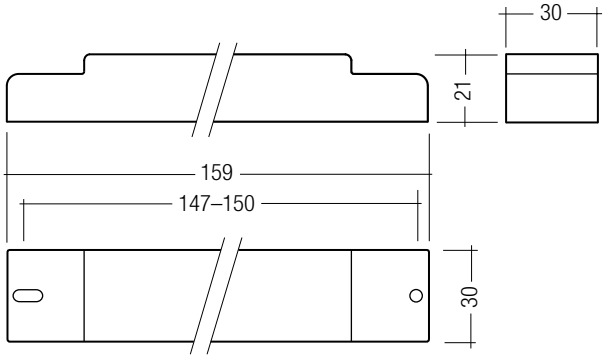

Technical data

Rated supply voltage	220 – 240 V
Mains frequency	50 / 60 Hz
Power	1.5 W
Operating temperature	0 ... +60 °C
Storage temperature ts	-25 ... +70 °C
Type of protection	IP20

→

For standards see data sheet

For wiring diagrams and installation examples see data sheet

Ordering data

Type	Article number	Packaging, carton
basicDIM RCL DBC	**86459306**	10 pc(s).

Specific technical data

Type	Inputs			Outputs			Link Line	
	Dimming momentary-action switch	Max. basicDIM sensors	Max. sensor line length	Digital control line DALI	Control output per physical output DALI (devices)	Dimming range	Voltage DC at correct mains wiring ②	Number of combinable modules
basicDIM RCL DBC	single	4	10 m	1	10	1 – 100 %	15 V	20

① To ensure the functionality of the Link Line the phase and the neutral wires have to be connected correctly.
② If reverse polarity is applied to mains, mains voltage is at the Link Line and the function of Link Line will be affected.

RoHS

ACCES-SORIES

basicDIM Sensor 5DP 19f

Ambient light sensor and motion detector

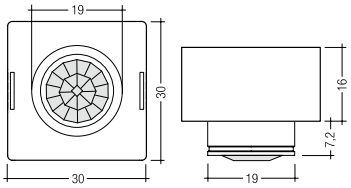

Product description

- Optional ambient light sensor and motion detector for basicDIM RCL and basicDIM RCL DBC
- Compact low-profile dimensions for luminaire installation
- With push-in terminal
- 5-year guarantee

Technical data

Light measurement at the sensor head ①	5 – 500 lx

Ordering data

Type	Article number	Packaging, carton	Weight per pc.
basicDIM 5DP 19f	**86459173**	50 pc(s).	0.06 kg

① The measured value at the sensor head corresponds to approx. 10 to 1,500 lux on the surface measured.

RoHS

ACCES-SORIES

basicDIM Sensor 5DP 41rc

Ambient light sensor and motion detector

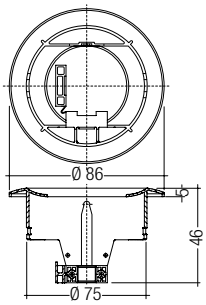

Product description

- Optional ambient light sensor and motion detector for basicDIM RCL and basicDIM RCL DBC
- Ceiling installation
- 5-year guarantee

Technical data

Light measurement at the sensor head ①	5 – 500 lx

Ordering data

Type	Article number	Packaging, carton	Weight per pc.
basicDIM Sensor 5DP 41rc	**86459115**	20 pc(s).	0.06 kg

① The measured value at the sensor head corresponds to approx. 10 to 1,500 lux on the surface measured.

RoHS

ACCES-SORIES

basicDIM Sensor 5DP 41rs

Ambient light sensor and motion detector

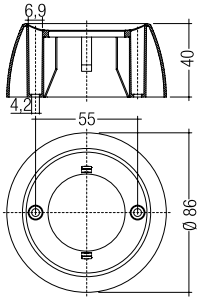

Product description

- Optional ambient light sensor and motion detector for basicDIM RCL and basicDIM RCL DBC
- Surface mounting
- 5-year guarantee

Technical data

Light measurement at the sensor head ①	5 – 500 lx

Ordering data

Type	Article number	Packaging, carton	Weight per pc.
basicDIM Sensor 5DP 41rs	**86459116**	20 pc(s).	0.06 kg

① The measured value at the sensor head corresponds to approx. 10 to 1,500 lux on the surface measured.

RoHS

ACCES-SORIES

Strain-relief set

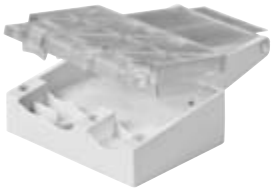

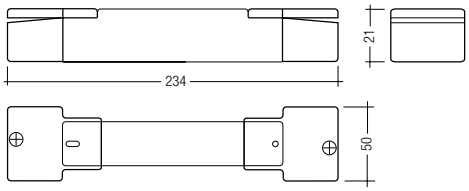

Product description

- 5-year guarantee

Ordering data

Type	Article number	Packaging, carton
Strain-relief set	86458689	10 pc(s).

RoHS

ACCES-SORIES

Accessories for basicDIM Sensor 5DP 19f

Product description

- Optional for increasing the detection range of the motion detector for basicDIM Sensor 5DP 19f
- 5-year guarantee

Ordering data

Type	Article number	Packaging, carton	Weight per pc.
smartDIM mirror	86454640	50 pc(s).	0.002 kg

CE RoHS

NEW

basicDIM ILD

Compact control module with ambient light sensor and motion sensor

Product description

- Compact dimensions for luminaire installation
- For up to 10 DSI or DALI ballasts
- 2 DALI/DSI output channels with adjustable negative off set from channel 2 to channel 1
- Ambient light sensor with motion detector
- Max. installation height 5 m
- Momentary-action switch input for on/off switching and dimming
- Can be remote controlled
- Individual adjustment of the parameters with DSI-SMART programmer
- 5-year guarantee

→ For product data sheet go to www.tridonic.com, or available on request

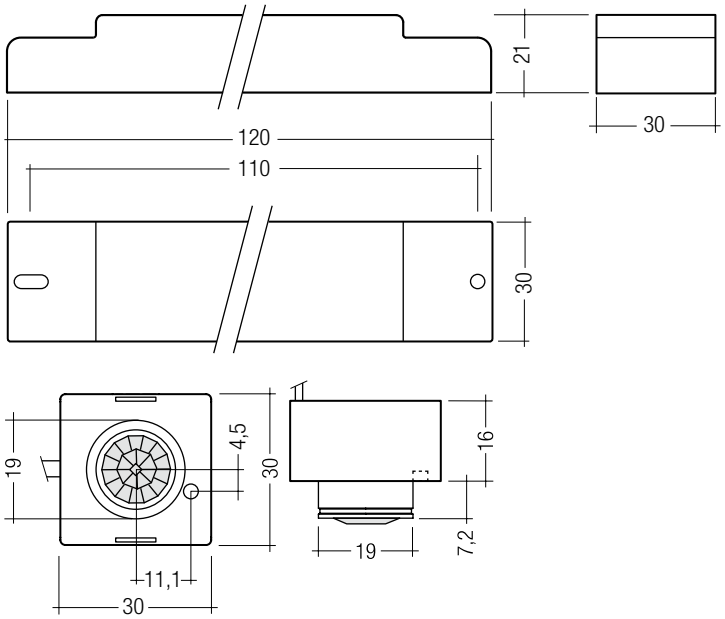

Technical data

Rated supply voltage	220 – 240 V
Mains frequency	50 / 60 Hz
Power	2 W
Output, standby	0.5 W
Momentary-action switch input for dimming	single
Digital control line DSI/DALI	2
Control output (devices)	10
Max. output cable length at 1.5 mm²	100 m
Operating temperature	0 ... +60 °C
Storage temperature ts	-25 ... +70 °C
Type of protection	IP20
Max. casing temperature tc	75 °C

Ordering data

Type	Article number	Mounting	Packaging, carton
basicDIM ILD	**86459377**	Luminaire installation	10 pc(s).

→

For standards see data sheet

For wiring diagrams and installation examples see data sheet

Specific technical data

Type	Detection				Max. cable length sensor
	Light detection angle asymmetric	Light measurement at the sensor head ①	Illuminance (factory default) ②	Motion detection angle symmetric	
basicDIM ILD	83 °	5 – 500 lx	500 lx	92 °	0.8 m

① The measured value at the sensor head corresponds to approx. 10 to 1,500 lux on the surface measured.
② The illuminance is set for a room defined by Tridonic. Depending on the actual room (reflectance) the measured illuminance may deviate from this value. The illuminance should therefore be checked in the installation and adjusted if necessary.

RoHS

ACCES-SORIES

IR SMART Controller

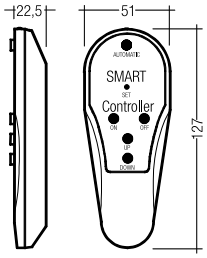

Product description

- Optional infra-red remote control
- Switching on and off (On/Off button)
- Dimming (Up/Down button)
- Activation of automatic lighting control (Automatic button)
- Setting the threshold control point (Set button)
- 5-year guarantee

Ordering data

Type	Article number	Packaging, carton	Weight per pc.
DSI-SMART Controller	86451922	1 pc(s).	0.075 kg

RoHS

ACCES-SORIES

DSI SMART Programmer

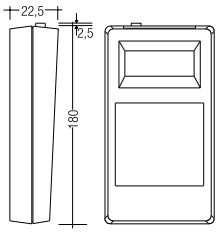

Product description

- Optional infra-red programming unit for DSI-SMART PTM
- Settings can be read and modified
- Programmable functions such as light level, time delay, P.I.R., bright-out, power up
- 5-year guarantee

Ordering data

Type	Article number	Packaging, carton	Weight per pc.
DSI-SMART Programmer	86447355	1 pc(s).	0.35 kg

ACCES-SORIES

basicDIM ILD Programmer

Product description

- Optinal infra-red programming unit for basicDIM ILD
- Setting of predefined discrete parameter values
- Programmable functions such as light level, time delay, P.I.R., bright-out, power up

Ordering data

Type	Article number	Packaging, carton	Weight per pc.
basicDIM ILD Programmer	28000257	210 pc(s).	0.3 kg

RoHS

ACCES-SORIES

basicDIM ILD Sensor Cover Frame

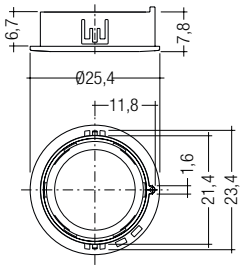

Product description

- Cover frame for attaching the sensor directly to the luminaire casing

Ordering data

Type	Article number	Packaging, bag	Packaging, carton	Weight per pc.
basicDIM Mounting Ring	**86459426**	50 pc(s).	200 pc(s).	0.001 kg

RoHS

ACCES-SORIES

Accessories for smartDIM Sensor, basicDIM ILD

Product description

- Optional for increasing the detection range of the motion detector for smartDIM Sensor 1 or basicDIM ILD
- 5-year guarantee

Ordering data

Type	Article number	Packaging, carton	Weight per pc.
smartDIM mirror	**86454640**	50 pc(s).	0.002 kg

RoHS

DSI-SMART PTM

Ambient light sensor and presence detector for constant lighting control

Product description

- Ambient light sensor with motion detector
- Momentary-action switch input for on/off switching and dimming
- 3 different casing versions
- For 4 or 25 DSI or DALI ballasts
- Functions can be configured with the DSI-SMART Programmer
- 5-year guarantee

→ For product data sheet go to www.tridonic.com, or available on request

Technical data

Rated supply voltage	220 – 240 V
Mains frequency	50 / 60 Hz
Operating temperature	0 ... +60 °C
Storage temperature ts	-25 ... +60 °C
Type of protection	IP20

→

For standards see data sheet

For wiring diagrams and installation examples see data sheet

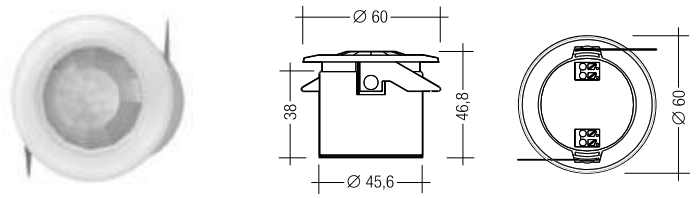

Fig. 1

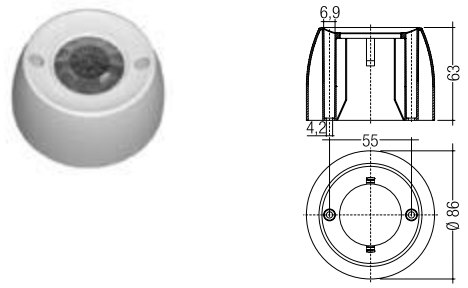

Fig. 2

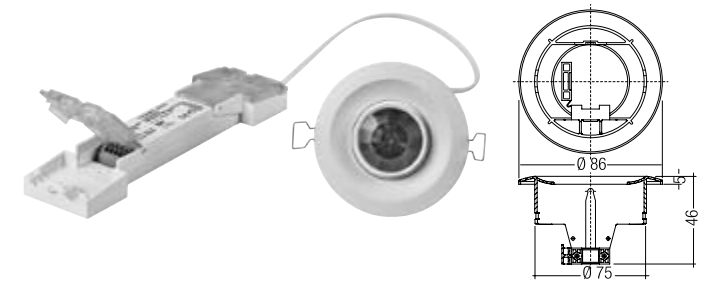

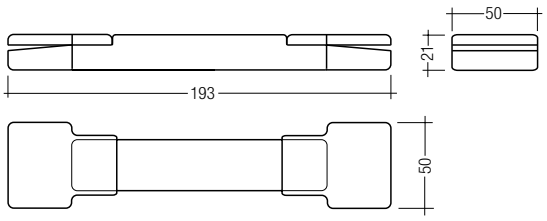

Fig. 3

Ordering data

Type	Article number	Figure	Packaging, carton
DSI-SMART PTM integrated Luminaire installation	**86458588**	1	10 pc(s).
DSI-SMART PTM remote surface Surface mounting	**86458589**	2	20 pc(s).
DSI-SMART PTM remote ceiling Ceiling installation	**86458587**	3	10 pc(s).

Specific technical data

Type	Supply		Detection	Inputs	Outputs		
	Power	Output, standby	Light measurement at the sensor head ①	Dimming momentary-action switch	Digital control line DSI/DALI ②	Control output per physical output (devices)	Maximum DSI cable length at 1.5 mm²
DSI-SMART PTM integrated	1.7 W	1.5 W	5 – 500 lx	single	1	4	250 m
DSI-SMART PTM remote surface	1.7 W	1.5 W	5 – 500 lx	single	1	4	250 m
DSI-SMART PTM remote ceiling	3.9 W	1.5 W	5 – 500 lx	single	1	25	250 m

① The measured value at the sensor head corresponds to approx. 10 to 1,500 lux on the surface measured.
② DALI from DSI SMART PTM V1.1. For parameterization the DSI SMART Programmer from V2.01 is required.

RoHS

ACCES-SORIES

IR SMART Controller

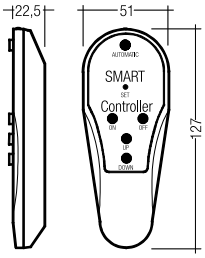

Product description

- Optional infra-red remote control
- Switching on and off (On/Off button)
- Dimming (Up/Down button)
- Activation of automatic lighting control (Automatic button)
- Setting the threshold control point (Set button)
- 5-year guarantee

Ordering data

Type	Article number	Packaging, carton	Weight per pc.
DSI-SMART Controller	86451922	1 pc(s).	0.075 kg

RoHS

ACCES-SORIES

DSI SMART Programmer

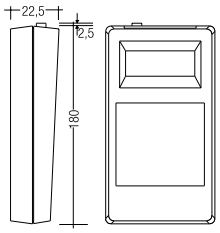

Product description

- Optional infra-red programming unit for DSI-SMART PTM
- Settings can be read and modified
- Programmable functions such as light level, time delay, P.I.R., bright-out, power up
- 5-year guarantee

Ordering data

Type	Article number	Packaging, carton	Weight per pc.
DSI-SMART Programmer	86447355	1 pc(s).	0,35 kg

RoHS

smartDIM SM lp

Control module for combination with ambient light sensor, momentary-action switch or motion sensor

Product description

- Digital DSI control module (luminaire installation unit) for daylight control, motion detector and momentary-action switch input
- For luminaire installation in a low-profile casing
- Input for a maximum of 2 smartDIM sensors
- Dimming and switching via single momentary-action switch; multiple switches can be connected in parallel
- Mode can be selected via rotary switch
- The device can be disconnected from the power supply via a built-in relay (this reduce standby losses)
- 5-year guarantee

→ For product data sheet go to www.tridonic.com, or available on request

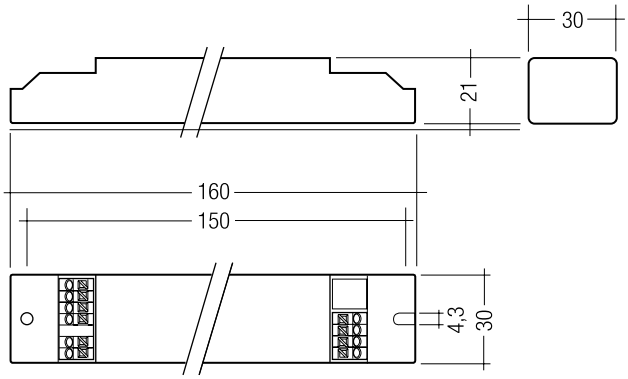

Technical data

Rated supply voltage	220 – 240 V
Mains frequency	50 / 60 Hz
Power	1.5 W
Operating temperature	0 ... +60 °C
Storage temperature ts	-25 ... +55 °C
Type of protection	IP20

→

For standards see data sheet

For wiring diagrams and installation examples see data sheet

Ordering data

Type	Article number	Packaging, carton
smartDIM SM lp	**86458337**	12 pc(s).

Specific technical data

Type	Inputs			Outputs			Output, relay (L')		
	Dimming momentary-action switch	Max. smartDIM sensors	Max. sensor line length	Digital control line DSI	Control output per physical output (devices)	Maximum DSI cable length at 1.5 mm²	Max. switching output (e.g. PCA)	Maximum apparent power	Max. switching output
smartDIM SM lp	single	2	10 m	1	25	250 m	2	200 VA	500 W

RoHS

ACCES-SORIES

smartDIM Sensor 1

Ambient light sensor and motion detector

Product description

- Optional ambient light sensor and motion detector for smartDIM SM Ip
- Compact low-profile dimensions for luminaire installation
- With push-in terminal or cable
- 5-year guarantee

Technical data

Light measurement at the sensor head ①	5 – 500 lx

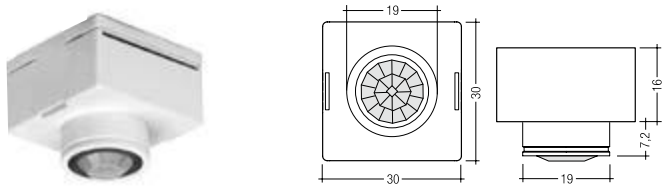

Fig. 1

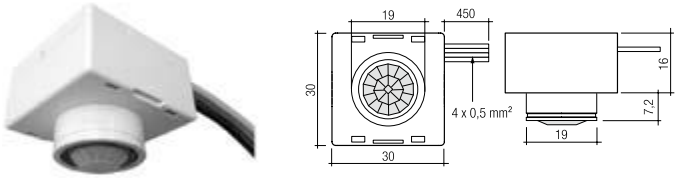

Fig. 2

Ordering data

Type	Article number	Figure	Packaging, carton	Weight per pc.
smartDIM Sensor 1 Cable	**86458462**	2	25 pc(s).	0.043 kg
smartDIM Sensor 1	**86454265**	1	50 pc(s).	0.043 kg

① The measured value at the sensor head corresponds to approx. 10 to 1,500 lux on the surface measured.

RoHS

ACCES-SORIES

smartDIM Sensor 2

Product description

- Optional ambient light sensor and motion detector for smartDIM SM Ip
- Compact low-profile dimensions for luminaire installation
- 5-year guarantee

Technical data

Light measurement at the sensor head ①	5 – 500 lx

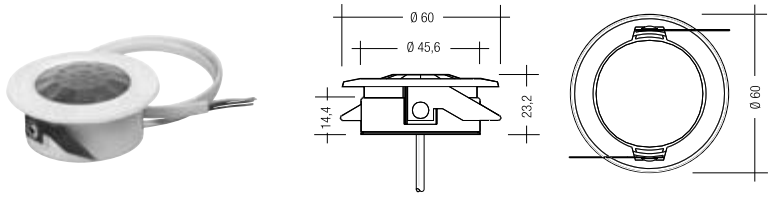

Ordering data

Type	Article number	Packaging, carton	Weight per pc.
smartDIM Sensor 2	**86454523**	10 pc(s).	0.038 kg

① The measured value at the sensor head corresponds to approx. 10 to 1,500 lux on the surface measured.

RoHS

ACCES-SORIES

Accessories for smartDIM Sensor, basicDIM ILD

Product description

- Optional for increasing the detection range of the motion detector for smartDIM Sensor 1 or basicDIM ILD
- 5-year guarantee

Ordering data

Type	Article number	Packaging, carton	Weight per pc.
smartDIM mirror	**86454640**	50 pc(s).	0.002 kg

CE RoHS

modularDIM Basic

Modular lighting control for 3 DSI channels

Product description

- Basic module for manual dimming and switching of 3 independent DSI output groups
- SELV switch inputs for using conventional momentary-action switches
- Up to 100 DSI devices per output channel
- Floating motion detector inputs for switching each group
- Ready to start without programming
- For installation in switching cabinets
- 5-year guarantee

→ For product data sheet go to www.tridonic.com, or available on request

Technical data

Rated supply voltage	120 – 277 V
Mains frequency	50 / 60 Hz
Power	< 10 W
Ambient temperature ta	0 ... +50 °C
Type of protection	IP20

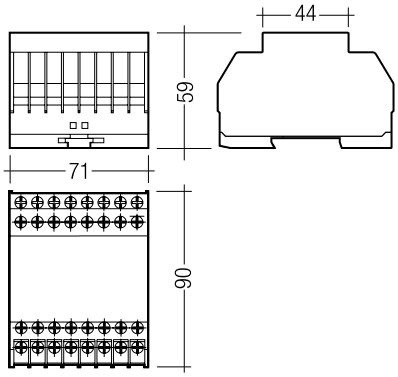

→

For standards see data sheet

For wiring diagrams and installation examples see data sheet

Ordering data

Type	Article number	Packaging, carton
modularDIM BASIC	**86454539**	10 pc(s).

Specific technical data

Type	Inputs		Outputs		
	Dimming momentary-action switch	Presence sensor	Digital control line DSI	Control output per physical output (devices)	Maximum DSI cable length at 1.5 mm²
modularDIM BASIC	1-way / 2-way	3	3	100	250 m

CE RoHS

ACCES-SORIES

modularDIM SC

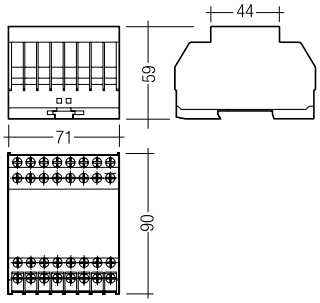

Product description

- Optional expansion module for scene control in the modularDIM system
- Retrieval and programming of up to 4 lighting scenes
- 4 SELV switch inputs for using conventional momentary-action switches
- 4 outputs for status LEDs
- 5-year guarantee

Technical data

Input, 4 momentary-action switches	single
Ambient temperature ta	0 ... +50 °C
Type of protection	IP20

Ordering data

Type	Article number	Packaging, carton
modularDIM SC	**86454545**	1 pc(s).

CE RoHS

ACCES-SORIES

modularDIM DM

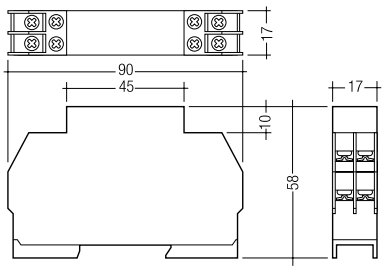

Product description

- Optional expansion module for daylight control in the modularDIM system
- Simple programming of independent daylight characteristics for each DSI group
- On/off switching of the daylight function by means of conventional switches
- 5-year guarantee

Technical data

Input, light sensor	1
Input, switch man/auto	1
Ambient temperature ta	0 ... +50 °C
Type of protection	IP20

Ordering data

Type	Article number	Packaging, carton
modularDIM DM	**86454564**	30 pc(s).

CE RoHS

ACCES-SORIES

modularDIM LC

Product description

- Optional expansion module for non-floating motion detectors or momentary-action switches in the modularDIM system

Technical data

Rated supply voltage	220 – 240 V
Mains frequency	50 / 60 Hz
Max. output dielectric strength	30 V (SELV)
Input, with electrical isolation	4,000 V 2 min.; 6 mm (SELV)
Ambient temperature ta	0 ... +50 °C
Type of protection	IP20

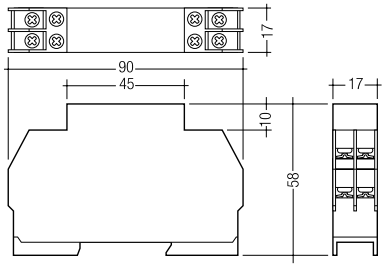

Ordering data

Type	Article number	Packaging, carton
modularDIM LC	**86457888**	30 Stk.

RoHS

ACCES-SORIES

Accessories for modularDIM DM

Product description

- Ceiling sensor for measuring daylight
- 5-year guarantee

Ordering data

Type	Article number	Packaging, carton
Sensor DAYLIGHT	**86454586**	136 pc(s).

RoHS

DSI-V/T

Control module for amplifying DSI signals or switch input

Product description

- Multi-functional DSI controller
- For amplifying the DSI signal for a maximum of 50 DSI devices or for cascading long lines
- Special function for tunnel applications
- Function can be set via DIP switches
- Input for manual dimming
- Input for motion detector or momentary-action switch for scene recall
- Different motion detector functions can be set
- One scene can be set and recalled
- 5-year guarantee

→ For product data sheet go to www.tridonic.com, or available on request

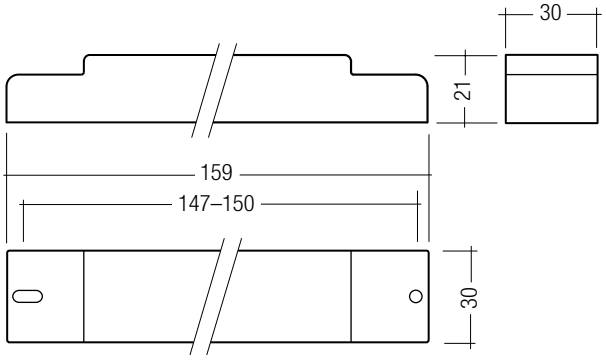

Technical data

Rated supply voltage	120 – 277 V
Mains frequency	50 / 60 Hz
Power	1 W
Ambient temperature ta	-25 ... +60 °C
Type of protection	IP20

→

For standards see data sheet

For wiring diagrams and installation examples see data sheet

Ordering data

Type	Article number	Packaging, carton
DSI-V/T	**86458690**	10 pc(s).

Specific technical data

Type	Inputs			Outputs		
	Dimming momentary-action switch	Presence sensor	DSI signal ①	Digital control line DSI	Control output per physical output (devices)	Maximum DSI cable length at 1.5 mm²②
DSI-V/T	1-way / 2-way	1	1	1	50	250 m

① One DSI-V/T corresponds to the DSI load of two DSI devices.
② Max. cable length in tunnel/security mode = 500 m (DSI-V function only).

RoHS

ACCES-SORIES

Strain-relief set

Product description

- 5-year guarantee

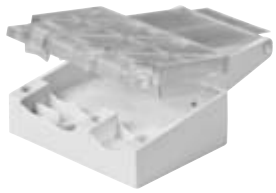

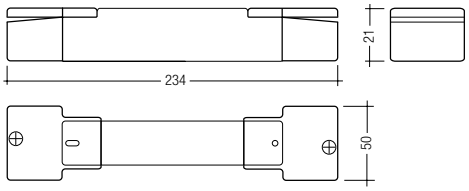

Ordering data

Type	Article number	Packaging, carton
Strain-relief set	**86458689**	10 pc(s).

DALI MSensor 02

Multi-sensor for DALI system

Product description

- Component of the comfortDIM system (DALI standalone)
- With ambient light dependent control and presence detection
- Simple group assignment via rotary switch
- Multiple MSensors possible in a group
- Can be remote controlled
- Lighting control and presence detection can be deactivated
- Individual adjustment of the parameters with configuration software
- Multi-master compatible: Multiple control modules are possible in a DALI system
- Power supply via DALI line

→ For product data sheet go to www.tridonic.com, or available on request

Technical data

Supply via	DALI cable
Current draw	6 mA from DALI
Operating temperature	0 ... +50 °C
Storage temperature ts	-25 ... +55 °C
Type of protection	IP20

→

For wiring diagrams and installation examples see data sheet

Fig. 1

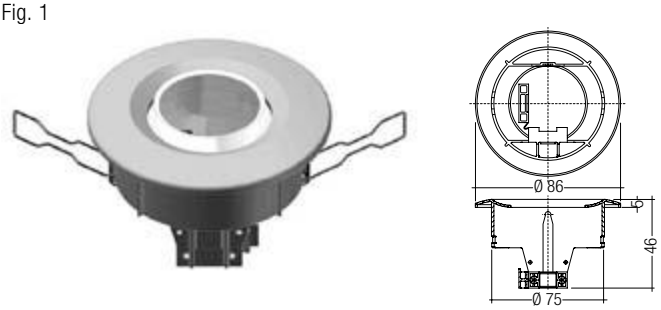

Fig. 2

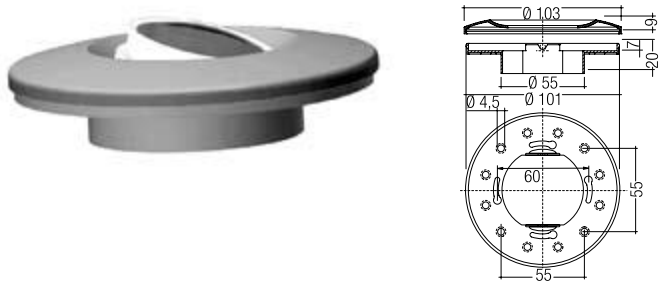

Fig. 3

Fig. 4

Ordering data

Type	Article number	Figure	Packaging, carton
DALI-MSensor 02 5DPI 41f Luminaire installation	**86459305**	1	12 pc(s).
DALI-MSensor 02 5DPI 41rc Ceiling installation	**86459303**	2	20 pc(s).
DALI-MSensor 02 5DPI 41w Box installation	**86459304**	3	20 pc(s).
DALI-MSensor 02 5DPI 41rs Surface mounting	**86459302**	4	20 pc(s).

Specific technical data

Type	Detection						
	Ø of detection range, mounted at a height of 2.5 m	Extension of the detection area ①	Swivel design	Swivel range	Detection angle	Light measurement at the sensor head ②	Infra-red control range
DALI-MSensor 02 5DPI 41f	5 m	–	no	0°	360°	10 – 650 lx	5 m
DALI-MSensor 02 5DPI 41rc	5 m	2 m	yes	±15°	360°	10 – 650 lx	5 m
DALI-MSensor 02 5DPI 41w	5 m	2 m	yes	±15°	360°	10 – 650 lx	5 m
DALI-MSensor 02 5DPI 41rs	5 m	–	no	0°	360°	10 – 650 lx	5 m

① If mounted at a height of 2.5 m and swivelled through 15 °.
② The measured value at the sensor head corresponds to approx. 15 to 2,000 lux on the surface measured.

RoHS

ACCES-SORIES

DALI RC

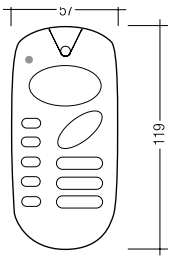

Product description

- Optional infra-red remote control
- Switching on and off (On/Off button)
- Dimming (Up/Down button)
- Activating automatic lighting control (sun/cloud button)
- Calling up two scenes
- Calling up five fixed light output values (100, 50, 25, 12 and 6 %)
- Individual adjustment of the button assignments with configuration software
- Setting the threshold control point
- With wall bracket

Ordering data

Type	Article number	Packaging, carton	Weight per pc.
DALI-RC	**86458263**	10 pc(s).	0.1 kg

RoHS

ACCES-SORIES

IR SMART Controller

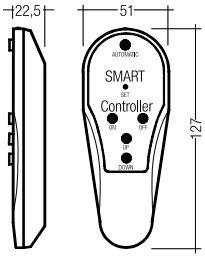

Product description

- Optional infra-red remote control
- Switching on and off (On/Off button)
- Dimming (Up/Down button)
- Activation of automatic lighting control (Automatic button)
- Setting the threshold control point (Set button)
- 5-year guarantee

Ordering data

Type	Article number	Packaging, carton	Weight per pc.
DSI-SMART Controller	**86451922**	1 pc(s).	0.075 kg

DALI GC / DALI GC-A

Control module for 2 DALI groups

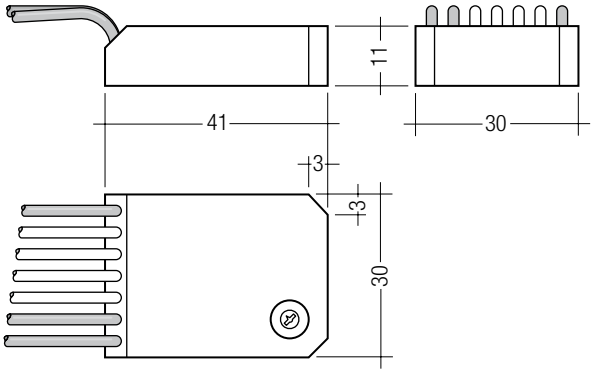

Product description

- Control module for standard momentary-action switch
- For sending dimming and switching commands to two DALI groups
- 2 momentary-action switch inputs
- DALI GC only: DALI devices can be addressed and assigned by means of a simple key sequence
- Rotary switch for selecting groups 1 – 16 or “broadcast”
- Multi-master compatible: Multiple control modules are possible in a DALI system
- Power supply via DALI line
- 5-year guarantee

Note

- Wires to momentary-action switches must not be extended

→ For product data sheet go to www.tridonic.com, or available on request

Technical data

Supply via	DALI cable
Current draw	6 mA from DALI
Input, 2 momentary-action switches	1-way / 2-way
Output	DALI
Ambient temperature ta	0 ... +50 °C
Type of protection	IP20

Ordering data

Type	Article number	Packaging, carton
DALI GC	**24033450**	1 pc(s).
DALI GC-A	**24138907**	1 pc(s).

→

For wiring diagrams and installation examples see data sheet

DALI SC / DALI SC-A

Control module for 4 DALI lighting scenes

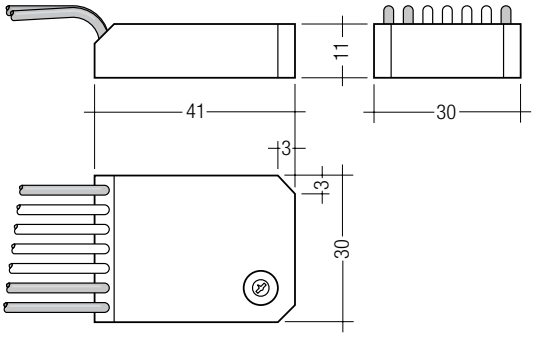

Product description

- Control module for standard momentary-action switch
- For calling up lighting scene values in DALI devices
- 4 momentary-action switch inputs
- DALI SC only: Lighting scene values in DALI devices can be programmed by means of a simple key sequence
- Rotary switch for selecting 4 DALI scenes 1 – 16
- Multi-master compatible: Multiple control modules are possible in a DALI system
- Power supply via DALI line
- 5-year guarantee

Note

- Wires to momentary-action switches must not be extended

→ For product data sheet go to www.tridonic.com, or available on request

Technical data

Supply via	DALI cable
Current draw	6 mA from DALI
Input, 4 momentary-action switches	single
Output	DALI
Ambient temperature ta	0 ... +50 °C
Type of protection	IP20

Ordering data

Type	Article number	Packaging, carton
DALI SC	**24034263**	100 pc(s).
DALI SC-A	**24138906**	1 pc(s).

→

For wiring diagrams and installation examples see data sheet

DALI MC

Control module with 4 freely programmable inputs

Product description

- Control module with 4 inputs
- User-definable switching modes
- Each input can be individually set
- Objective: Setting individual addresses 1 – 64, groups 1 – 16 or “broadcast”
- Multi-master compatible: Multiple control modules are possible in a DALI system
- Sequencer for 4 scenes
- Stairwell function with 2 dimming levels
- Power-up function for sending a preset command after a delay
- Power supply via DALI line
- 5-year guarantee

→ For product data sheet go to www.tridonic.com, or available on request

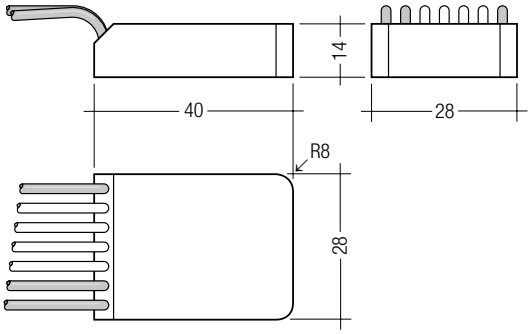

Technical data

Supply via	DALI cable
Current draw	6 mA from DALI
Input	4 momentary-action switches or relays
Output	DALI
Ambient temperature ta	0 ... +50 °C
Type of protection	IP20

Ordering data

Type	Article number	Packaging, carton
DALI MC	**86458507**	250 pc(s).

→

For wiring diagrams and installation examples see data sheet

DALI XC

Control module with 4 freely programmable inputs

Product description

- DALI input controller
- 4 independent inputs for floating contacts
- For connecting standard momentary-action switch or switches
- Adjustable operating mode and range via 2 rotary selector
- Multiple DALI XCs possible on the DALI line
- Power supply via DALI line
- Connection wires according to the terminal colours with 25 cm length included
- 5-year guarantee

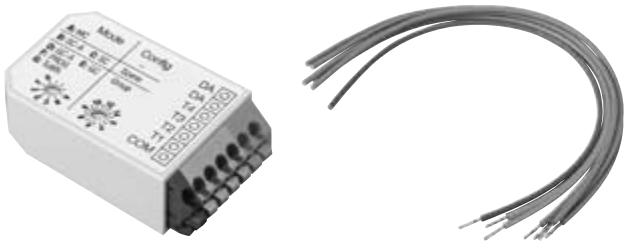

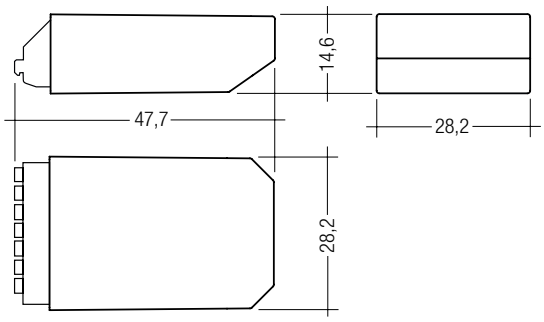

Technical data

Supply via	DALI cable
Current draw	6 mA
Input	4 momentary-action switches or relais
Output	DALI
Operating temperature	0 ... +60 °C
Storage temperature	-25 ... +80 °C
Humidity	20 ... 90 % (non-condensing)
Type of protection	IP20
Mounting	Mounting box 60 x 61 mm (ø x D)
Casing material	PC, halogen-free polycarbonate, non-flammable
Dimension L x W x H	47.7 x 28.2 x 14.6 mm

Ordering data

Type	Article number	Packaging, carton	Weight per pc.
DALI XC	**22185327**	1 pc(s).	0.012 kg

Wiring diagrams and installation examples see data sheet

DALI TOUCHPANEL 02

Operating and control unit

Product description

- Control panels and controllers for DALI systems
- For controlling multiple luminaire groups and calling up preset lighting scenes
- Flexible design: individual design can be used
- Multi-master compatible: Multiple control modules are possible in a DALI system
- Power supply via DALI line
- Individual adjustment of the control panel and button assignments with configuration software
- Setting group addresses or “broadcast”
- Setting scenes
- Tunable white (colour converter) control (colour temperature along the Planckian Locus)
- 5-year guarantee

→ For product data sheet go to www.tridonic.com, or available on request

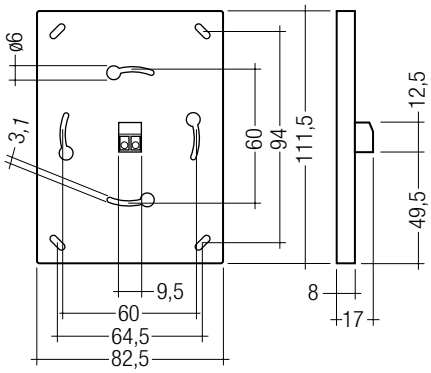

Technical data

Supply via	DALI cable
Current draw	6 mA
Output	DALI
Ambient temperature ta	0 ... +50 °C
Storage temperature ts	0 ... +50 °C
Humidity	5 ... max. 85 % (non-condensing)
Type of protection	IP20
Housing material	ABS
Housing colour	RAL 9010

Ordering data

Type	Article number	Packaging, carton	Weight per pc.
DALI TOUCHPANEL02 white	**28000022**	1 pc(s).	0.08 kg

→

Wiring diagrams and installation examples see data sheet

DALI x/e-touchPANEL 02

Lighting and emergency lighting control system

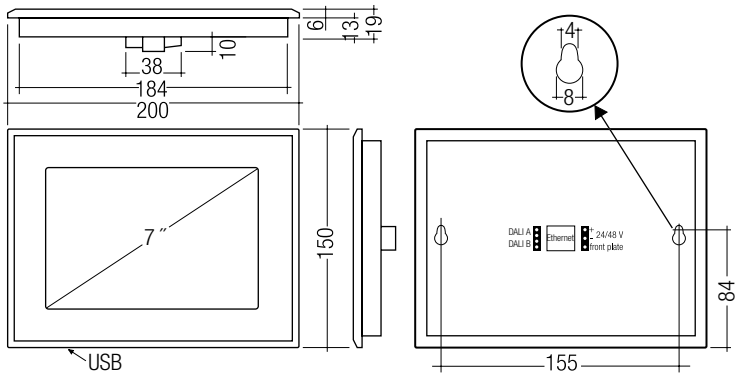

Product description

DALI control system with 2 mode options:

- Light management in mains mode
- Emergency lighting management

Properties

- Colour touch screen (7")
- Background lighting with RGB LEDs
- User-friendly application software
- With DALI system functions of addressing and grouping
- USB and ethernet interface
- Can be remote-controlled via standard internet browser or em-LINK software (available at www.tridonic.com)
- Up-/downloading of the emergency lighting test report and firmware via USB or Ethernet
- 5-year guarantee

Lighting management

- Lighting management system with up to 128 DALI ECGs
- Start-up, control and operating unit
- Manual dimming and switching
- Manual scene recall or timed scene recall with a maximum of 99 sequences
- Tunable white (colour converter) control (colour temperature along the Planckian Locus)
- Weekday-controlled sequence programming (schedule)
- User-defined labelling of scenes, groups, sequences and schedules
- Optimised mode for RGB coloured light management

Emergency lighting management

- For small and medium emergency lighting systems with up to 120 DALI emergency lighting units (60 for each DALI line) per DALI x/e-touchPANEL 02
- 2 addresses for external status controls
- Function and endurance tests can be conducted in accordance with local regulations
- Supports patented addressing function ("EZ easy addressing")
- Individual labelling of groups and devices
- Calendar-controlled function and duration test
- Interconnection of up to 25 panels for bigger installations possible

→ For product data sheet go to www.tridonic.com, or available on request

Wiring diagrams and installation examples see data sheet

Technical data

Rated supply voltage mains adapter	230 – 240 V
Mains frequency mains adapter	50 / 60 Hz
Rated supply voltage DALI x/e-touchPANEL 02	24 – 48 V DC
Power	10 W
Number of DALI circuits	2
Current consumption of each DALI line	2 mA
Ambient temperature ta	0 ... +50 °C
Touchscreen size	7"
Touchscreen pixel	800 x 480
Colours	64K
Interface	USB, Ethernet
Dimensions L x W x H	200 x 150 x 20 mm
Distance between mounting holes (D)	155 mm
Type of protection	IP20

Ordering data

Type	Article number	Packaging, carton
DALI x/e-touchPANEL 02	**28000005**	1 pc(s).

DALI SQM

Sequencer module for DALI systems

Product description

- Sequencer module for DALI systems
- Continual transmission of DALI signals (step time)
- Calling up scenes 0 – 15
- End scene programmable
- Power supply via DALI line
- Rotary switch: 1 s to 30 min
- For installation in switching cabinets
- 5-year guarantee

→ For product data sheet go to www.tridonic.com, or available on request

Technical data

Supply via	DALI cable
Current draw	9 mA from DALI
Input	Rotary switch, 1 s – 30 min. Function switch: max. cable length 100 m
Output	DALI
Ambient temperature ta	0 ... +50 °C
Type of protection	IP20

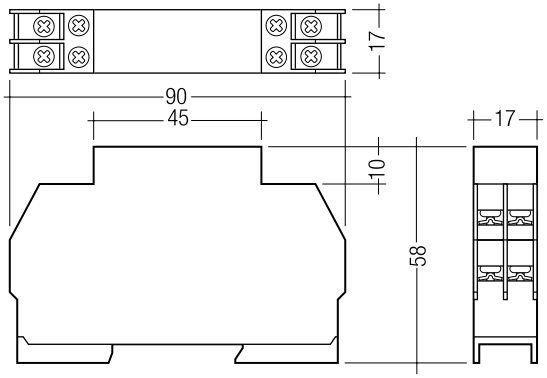

→

Wiring diagrams and installation examples see data sheet

Ordering data

Type	Article number	Packaging, carton
DALI SQM	**86458211**	30 pc(s).

DALI PS

DALI power supply for installation in switching cabinets

Product description

- For supplying 200 mA for DALI devices or control modules without their own power supplies
- For installation in switching cabinets
- 5-year guarantee

→ For product data sheet go to www.tridonic.com, or available on request

Technical data

Rated supply voltage	120 – 240 V
Mains frequency	50 / 60 Hz
Power	4 W
Output	DALI
Max. output current, DALI	200 mA
Ambient temperature ta	0 ... +50 °C
Type of protection	IP20

→

Wiring diagrams and installation examples see data sheet

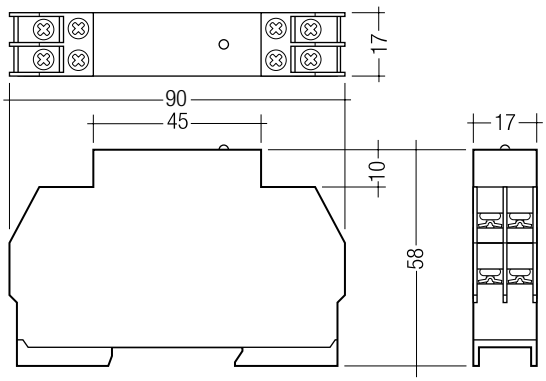

Ordering data

Type	Article number	Packaging, carton
DALI PS	**24033444**	1 pc(s).

DALI PS2

DALI power supply for installation in switching cabinets

Product description

- For supplying 240 mA for DALI devices or control modules without their own power supplies
- For installation in switching cabinets
- 5-year guarantee

→ For product data sheet go to www.tridonic.com, or available on request

Technical data

Rated supply voltage	220 – 240 V
Mains frequency	50 / 60 Hz
Power	5 W
Max. output current, DALI	240 mA
Operating temperature	0 ... +50 °C
Storage temperature ts	0 ... +70 °C
Type of protection	IP20

→

Wiring diagrams and installation examples see data sheet

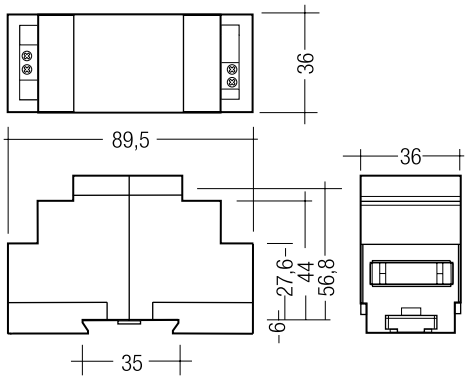

Ordering data

Type	Article number	Packaging, carton
DALI PS2	**86458559**	25 pc(s).

DALI PS2 standby

DALI power supply for installation in switching cabinets and standby function

Product description

- For supplying 240 mA for DALI devices or control modules without their own power supplies
- For installation in switching cabinets
- Automatic monitoring of the connected luminaires
- The built-in relay isolates the connected equipment from the power supply via an external contactor if all the luminaires are switched off
- The ballasts are switched on and set to the required status via DALI commands

→ For product data sheet go to www.tridonic.com, or available on request

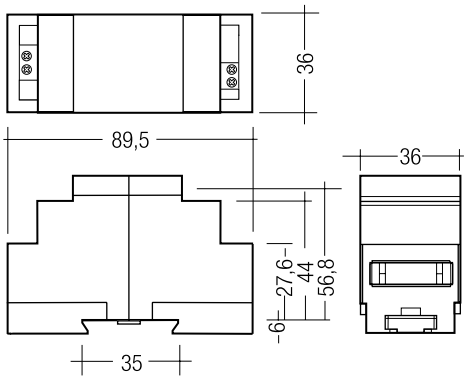

Technical data

Rated supply voltage	220 – 240 V
Mains frequency	50 / 60 Hz
Power	5 W
Max. output current, DALI	240 mA
Operating temperature	0 ... +50 °C
Storage temperature ts	0 ... +70 °C
Type of protection	IP20

→

Wiring diagrams and installation examples see data sheet

Ordering data

Type	Article number	Packaging, carton
DALI PS2 Standby	**86458560**	25 pc(s).

Specific technical data

Type	Output, relay				
	Max. switching voltage AC	Max. switching current	DC switching capability at 100 – 250 V DC	DC switching capability at 50 – 100 V DC	DC switching capability at 0 – 50 V DC
DALI PS2 Standby	250 V	1 A	0.3 A	0.5 A	1 A

DALI PS1

DALI power supply for separate installation

Product description

- For supplying 200 mA for DALI devices or control modules without their own power supplies
- Surface-mounted casing
- 5-year guarantee

→ For product data sheet go to www.tridonic.com, or available on request

Technical data

Rated supply voltage	230 – 240 V
Mains frequency	50 / 60 Hz
Power	4 W
Output	DALI
Max. output current, DALI	200 mA
Ambient temperature ta	0 ... +50 °C
Type of protection	IP20

→

Wiring diagrams and installation examples see data sheet

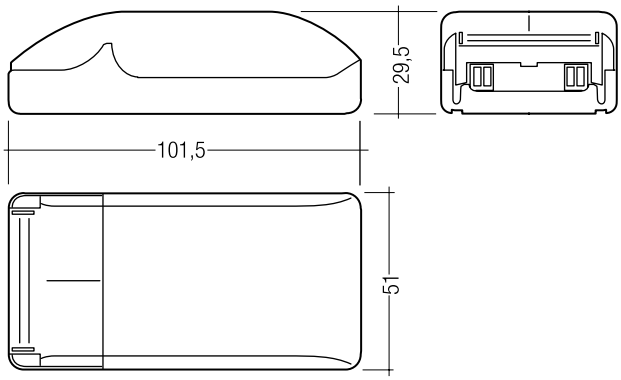

Ordering data

Type	Article number	Packaging, carton
DALI PS1	**24034323**	1 pc(s).

DALI USB

PC interface module for DALI systems

Product description

- Interface module from USB to a DALI system
- For connecting Tridonic software tools
- Addressing, programming and parametrising DALI installations and Tridonic devices
- Power supply via DALI line and USB interface
- 5-year guarantee

→ For product data sheet go to www.tridonic.com, or available on request

Technical data

Supply via	DALI cable and USB interface
Current draw	6 mA from DALI
Input	1 USB (Personal Computer)
Output	DALI
Ambient temperature ta	0 ... +50 °C
Type of protection	IP20

→

Wiring diagrams and installation examples see data sheet

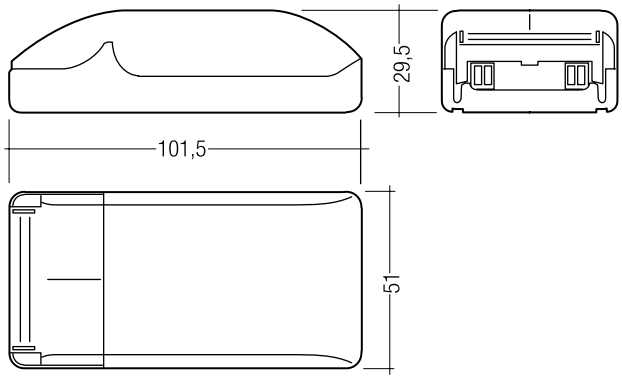

Ordering data

Type	Article number	Packaging, carton
DALI USB	**24138923**	50 pc(s).

DALI Interface RS232 PS/S

PC interface module for DALI systems

Product description

- Combines interface module and DALI power supply
- Integrated power supply with 240 mA for DALI devices or DALI control modules without power supply
- Interface module for connection of DALI systems with computer or programmable control systems
- For installation in switching cabinets
- 5-year guarantee

→ For product data sheet go to www.tridonic.com, or available on request

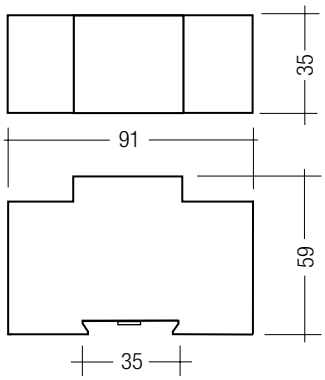

Technical data

Rated supply voltage	110 – 240 V
Permitted input voltage	110 – 260 V
Mains frequency	50 / 60 Hz
Power	1 – 6 W
Stand-by power	1 W
Max. output current, DALI	240 mA
Output voltage	16 V ±5 %
Operating temperature	0 ... +50 °C
Storage temperature ts	-20 ... +60 °C
Max. casing temperature tc	80 °C
Permitted relative humidity	10 – 90 %, not condensed
Mounting	DIN rail mounting, 35 mm
Housing material	PC, halogen-free polycarbonate, non-flammable
Type of protection	IP20

Ordering data

Type	Article number	Packaging, carton	Weight per pc.
DALI Interface RS232 PS/S	**22176712**	15 pc(s).	0.09 kg

→

Wiring diagrams and installation examples see data sheet

Specific technical data

Type	Input RS232	DALI output
DALI Interface RS232 PS/S	1	1

DALI DSI

Converter for DALI into DSI signals

Product description

- Converter for converting DALI signals into DSI signals
- For integrating DSI-based devices in DALI lighting control systems
- Rotary switch for assigning the group address for the DSI output
- 1 DSI output for a maximum of 5 DSI devices
- Power supply via DALI line
- 5-year guarantee

→ For product data sheet go to www.tridonic.com, or available on request

Technical data

Supply via	DALI cable
Ambient temperature ta	0 ... +50 °C
Type of protection	IP20

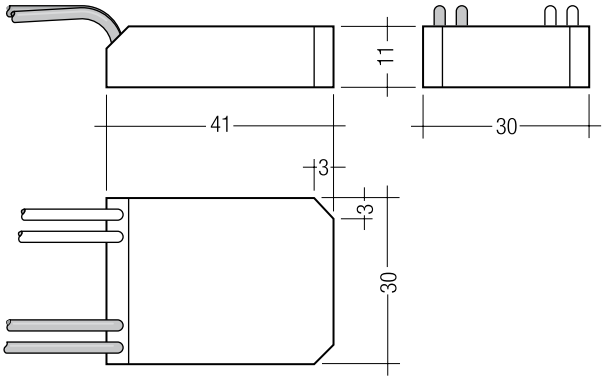

Wiring diagrams and installation examples see data sheet

Ordering data

Type	Article number	Packaging, carton
DALI DSI	**24034689**	1 pc(s).

Specific technical data

Type	Inputs			Outputs	
	DALI control input	Current draw	Number of DALI addresses	Digital control line DSI	Control output per physical output (devices)
DALI DSI	1	16 mA from DALI	1	1	5

RoHS

DALI DSI II

Converter for DALI into DSI signals

Product description

- Converter for converting DALI signals into DSI signals
- For integrating DSI-based devices in DALI lighting control systems
- 1 DALI input, 2 DSI outputs
- A DALI address can be assigned to each DSI output
- Rotary selector switch for assigning two group addresses for the two DSI outputs
- 25 DSI devices can be controlled per output
- Integrated power supply
- 5-year guarantee

→ For product data sheet go to www.tridonic.com, or available on request

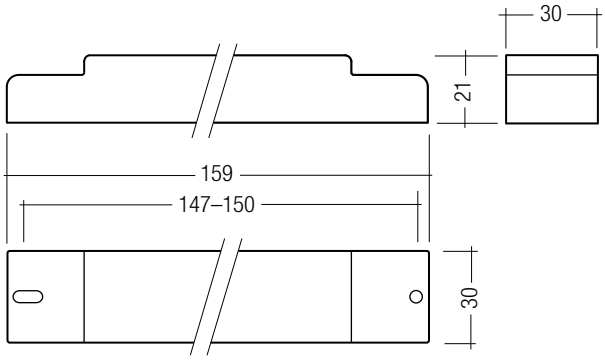

Technical data

Rated supply voltage	120 – 277 V
Mains frequency	50 / 60 Hz
Power	< 1 W
Ambient temperature ta	0 ... +60 °C
Type of protection	IP20

→

Wiring diagrams and installation examples see data sheet

Ordering data

Type	Article number	Packaging, carton
DALI-DSI II	**86458691**	10 pc(s).

Specific technical data

Type	Inputs			Outputs		
	DALI control input	Current draw	Number of DALI addresses	Digital control line DSI	Control output per physical output (devices)	Maximum DSI cable length at 1.5 mm²
DALI-DSI II	1	2 mA from DALI	2	2	25	250 m

RoHS

ACCES-SORIES

Strain-relief set

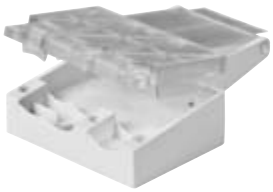

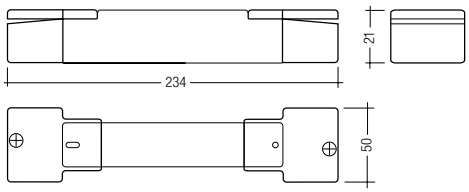

Product description

- 5-year guarantee

Ordering data

Type	Article number	Packaging, carton
Strain-relief set	**86458689**	10 pc(s).

DALI repeater

Extension of DALI cable length

Product description

- For amplifying the DALI signal
- For extending the DALI line length from 300 to 600 m
- A star-type network with multiple DALI repeater‘s can be set up
- Power supply via DALI line
- For installation in switching cabinets
- 5-year guarantee

Note

- Because of the signal delay it is not possible to connect multiple DALI repeaters in series (no cascading)
- There is no increase in the maximum number of DALI units. A maximum of 64 DALI addresses can be configured in a DALI circuit (main and subordinate circuit)
- Because of the electrical isolation between the main circuit and the subordinate circuit an additional DALI power supply unit is needed for each DALI repeater

→ For product data sheet go to www.tridonic.com, or available on request

Technical data

Supply via	DALI cable
Current draw for main control circuit (IN)	6 mA from DALI
Current draw for subordinate control circuit (OUT)	4 mA from DALI
Input	DALI
Output	DALI
Operating temperature	0 ... +50 °C
Storage temperature ts	-20 ... +70 °C
Type of protection	IP20

→

Wiring diagrams and installation examples see data sheet

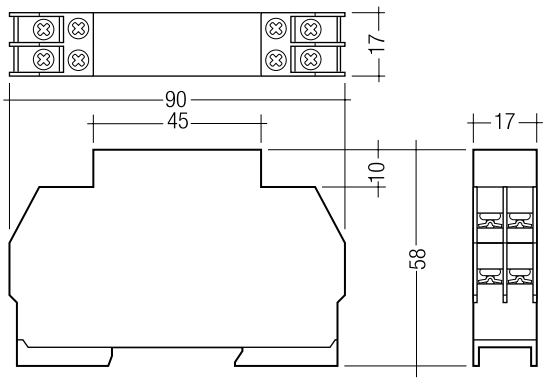

Ordering data

Type	Article number	Packaging, carton
DALI Repeater	**86458401**	1 pc(s).

DALI 3-RM-C

DALI control module for 3 relays

Product description

- Control of up to three standard 24 V DC contactors
- 1 DALI address per output
- 5-year guarantee

→ For product data sheet go to www.tridonic.com, or available on request

Technical data

Input voltage, AC	198 – 254 V
Input voltage, DC	200 – 240 V
Mains frequency	0 / 50 / 60 Hz
Power	< 30 W
Ambient temperature ta	-25 ... +45 °C
Type of protection	IP20

→

Wiring diagrams and installation examples see data sheet

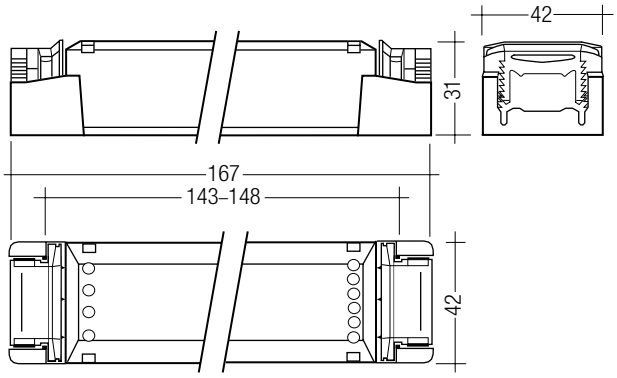

Ordering data

Type	Article number	Packaging, carton	Weight per pc.
DALI 3-RM-C	**86458247**	20 pc(s).	0.155 kg

Specific technical data

Type	Inputs			Outputs	
	DALI control input	Current draw	Number of DALI addresses	Output voltage, DC	Output power
DALI 3-RM-C	1	2 mA from DALI	3	3 x 24 V	25 W

DALI-RM/S 4x10 A

DALI relay output with 4 independent 10 A switching contacts

Product description

- Switching of 4 independent and potential free contacts via DALI
- Max. switching current per contact: 10 A at ohmic load (cos Φ = 1)
- 1 DALI address per switching contact
- For installation in switching cabinets
- Status LED for indicating the operating status
- Test switch for installation test
- 5-year guarantee

→ For product data sheet go to www.tridonic.com, or available on request

Technical data

Rated supply voltage	230 – 240 V
Mains frequency	50 / 60 Hz
Power	< 2 W
Ambient temperature ta	0 ... +50 °C
Storage temperature ts	-20 ... +70 °C
Humidity ①	5 % ... max. 85 %
Type of protection	IP20

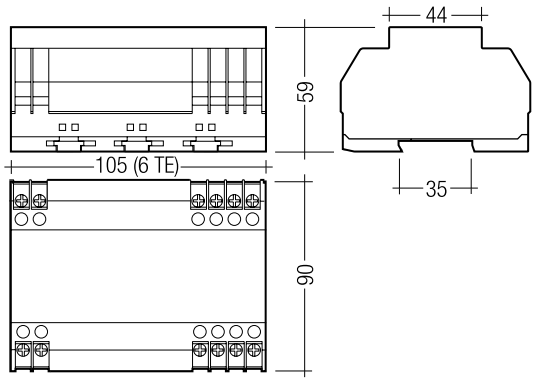

Wiring diagrams and installation examples see data sheet

Ordering data

Type	Article number	Packaging, carton	Weight per pc.
DALI-RM/S 4x10A	**22185237**	1 pc(s).	0.46 kg

Specific technical data

Type	Inputs			Output, relay		
	DALI control input	Current draw	Number of DALI addresses	Relay, floating	Switching output (at 125 V DC max.) ②	Switching output (at 240 V AC max.) ②
DALI-RM/S 4x10A	1	2 mA from DALI	4 (1 per contact)	4 (make contact)	30 W (ohmic load)	2,000 W / 10 A (ohmic load)

① Not condensed (max. 56 days/year at 85 %).
② More loads see data sheet.

DALI PCD 300 one4all

Leading-edge/trailing-edge phase dimmer

Product description

- Digital leading-edge and trailing-edge phase dimmer
- Total connected load: 30 – 300 VA
- one4all input: DALI, DSI and switchDIM input
- 1 dimmed phase (output)
- With automatic load detection
- Surface-mounted casing
- Status LED for indicating the operating status
- Not suitable for operation with LED bulbs
- 5-year guarantee

→ For product data sheet go to www.tridonic.com, or available on request

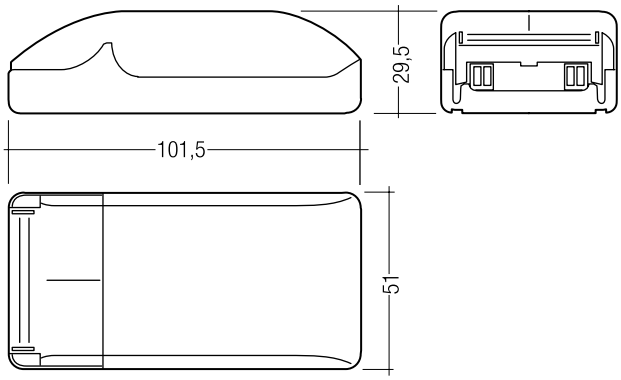

Technical data

Rated supply voltage	220 – 240 V
Mains frequency	50 / 60 Hz
Connected load	30 – 300 VA
Power loss	0.75 W (1.8 W at full load)
Ambient temperature ta	0 ... +50 °C
Type of protection	IP20

→

Wiring diagrams and installation examples see data sheet

Ordering data

Type	Article number	Packaging, carton	Weight per pc.
DALI-PCD 300 one4all	**86458303**	25 pc(s).	0.085 kg

Specific technical data

Type	Inputs			Outputs			Terminals
	Input, DALI/DSI control input and switchDIM	Current draw	Number of DALI addresses	Dimmed phase	Control range, DSI	Control range, DALI	
DALI-PCD 300 one4all	1	2 mA from DALI	1	1	0; 1 – 100 %	0; 0.1 – 100 %	0.5 – 1.5 mm²

DALI PCD/S

Leading-edge/trailing-edge phase dimmer

Product description

- Digital leading-edge and trailing-edge phase dimmer
- Total connected load: 40 – 1,000 VA
- DALI/DSI input
- Single (switchDIM) or double momentary-action switch input
- Preset function: storage and retrieval of any lighting value
- 1 dimmed phase (output)
- With automatic load detection
- For installation in switching cabinets
- Status LED for indicating the operating status
- Not suitable for operation with LED bulbs
- 5-year guarantee

→ For product data sheet go to www.tridonic.com, or available on request

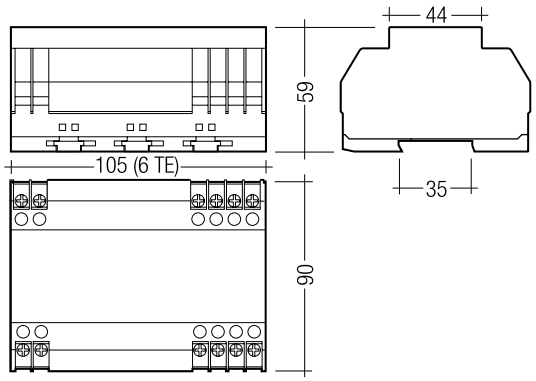

Technical data

Rated supply voltage	220 – 240 V
Mains frequency	50 / 60 Hz
Connected load	40 – 1,000 VA
Power loss	2 W (15 W at full load)
Ambient temperature ta	0 ... +40 °C
Type of protection	IP20

Wiring diagrams and installation examples see data sheet

Ordering data

Type	Article number	Packaging, carton	Weight per pc.
DALI-PCD/S	**22154332**	1 pc(s).	0.41 kg

Specific technical data

Type	Inputs					Outputs		Terminals
	Momentary-action switch input for preset retrieval	Single or twin momentary-action switches	DALI/DSI control input	Current draw	Number of DALI addresses	Dimmed phase	Control range, output	
DALI-PCD/S	1	1	1	2 mA from DALI	1	1	0; 1 – 100 %	0.75 – 2.5 mm²

RoHS

DSI-A/D

Converter for 1...10 V into DSI signal 1-channel for installation in luminaire

Product description

- Converter for converting analogue signals into DSI signals
- For connecting DSI devices in 1...10 V control systems
- For a maximum of 50 DSI devices
- Constant lighting control possible via terminal for SMART LS II
- On/off switching via separate switch input
- 5-year guarantee

→ For product data sheet go to www.tridonic.com, or available on request

Technical data

Rated supply voltage	230 – 240 V
Mains frequency	50 / 60 Hz
Power	4 W
Ambient temperature ta	0 ... +60 °C
Type of protection	IP20

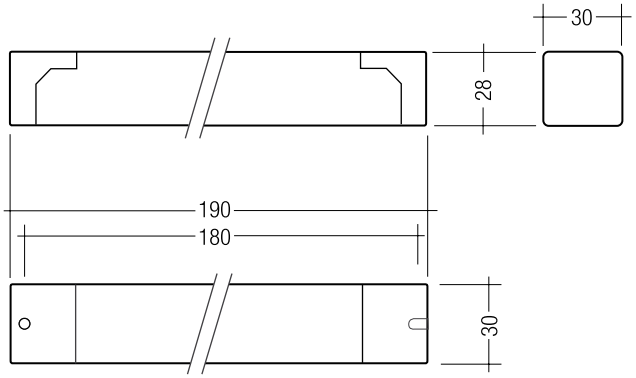

→

Wiring diagrams and installation examples see data sheet

Ordering data

Type	Article number	Packaging, carton
DSI-A/D	**86453957**	10 pc(s).

Specific technical data

Type	Inputs				Outputs		
	Dimming	Dimming, potentiometer (optional) ①	ON/OFF switch (220–240 V)	Ambient light sensor	Digital control line DSI	Control output per physical output (devices)	Maximum DSI cable length at 1.5 mm²
DSI-A/D	1...10 V	47 (≥47 ≤100) kΩ	1	1	1	50	100 m

① Potentiometer with linear characteristics, optimum: 47 kOhm, possible range: 47 – 100 kOhm; power ≥ 0,5 W.

CE RoHS

DSI-A/DS

Converter for 1...10 V into DSI signal 1-channel
for installation in switching cabinets

Product description

- Converter for converting analogue signals into DSI signals
- For installation in switching cabinets
- For connecting DSI devices in 1...10 V control systems
- For a maximum of 100 DSI devices
- On/off switching via separate switch input
- 5-year guarantee

→ For product data sheet go to www.tridonic.com, or available on request

Technical data

Rated supply voltage	230 – 240 V
Mains frequency	50 / 60 Hz
Power	4 W
Ambient temperature ta	0 ... +50 °C
Type of protection	IP20

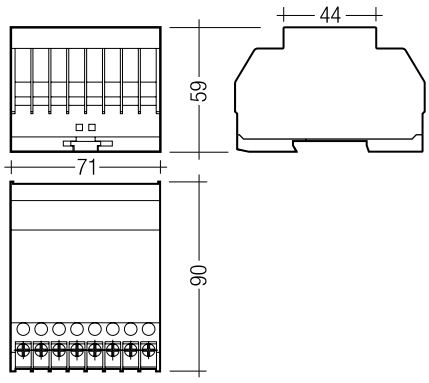

→

Wiring diagrams and installation examples see data sheet

Ordering data

Type	Article number	Packaging, carton
DSI-A/DS	**86456111**	10 pc(s).

Specific technical data

Type	Inputs			Outputs		
	Dimming	Dimming, potentiometer (optional) ①	ON/OFF switch (220–240 V)	Digital control line DSI	Control output per physical output (devices)	Maximum DSI cable length at 1.5 mm²
DSI-A/DS	1...10 V	47 (≥47 ≤100) kΩ	1	1	100	250 m

① Potentiometer with linear characteristics, optimum: 47 kOhm, possible range: 47 – 100 kOhm; power ≥ 0,5 W.

RoHS

KNX-DSI/S 6CH

Converter for KNX into DSI signals for installation in switching cabinets

Product description

- Converter for converting KNX signals into DSI signals
- For connecting digital DSI devices in KNX systems
- Real-time clock for controlling of time events
- 6 DSI outputs each for 50 DSI devices
- For installation in switching cabinets
- Status LED for indicating the operating status
- Test switch for installation test

→ For product data sheet go to www.tridonic.com, or available on request

Technical data

Rated supply voltage	220 – 240 V
AC voltage range	198 – 264 V
Mains frequency	50 / 60 Hz
Power	5 W
Output voltage, DC	16 V
Storage temperature ts	-20 ... +70 °C
Ambient temperature ta	0 ... +50 °C
Humidity	5 ... max. 75 % (non-condensing)
Housing material	Housing of PC, base of PPO
Housing colour	Housing RAL 7035, base RAL 7021
Type of protection	IP20
Protection class	II

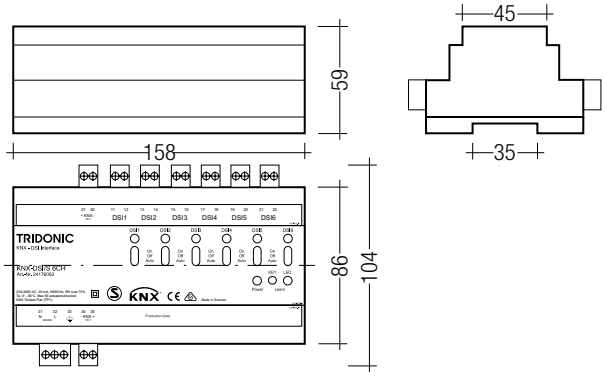

→

Wiring diagrams and installation examples see data sheet

Ordering data

Type	Article number	Packaging, carton	Weight per pc.
KNX-DSI/S 6CH	**24176093**	1 pc(s).	0.1 kg

Specific technical data

Type	Inputs	Outputs		
	Dimming / Switching / Reporting	Digital control line DSI	Control output per physical output (devices)	Maximum DSI cable length at 1.5 mm²
KNX-DSI/S 6CH	KNX (TP-1)	6	50	250 m

RoHS

LON-DSI/S 6CH

Converter for LON into DSI signals for installation in switching cabinets

Product description

- Converter for converting LON signals into DSI signals
- For connecting digital DSI devices in LON systems
- Real-time clock for controlling of time events
- 6 DSI outputs each for 50 DSI devices
- For installation in switching cabinets
- Status LED for indicating the operating status
- Test switch for installation test

→ For product data sheet go to www.tridonic.com, or available on request

Technical data

Rated supply voltage	220 – 240 V
AC voltage range	198 – 264 V
Mains frequency	50 / 60 Hz
Power	5 W
Output voltage, DC	16 V
Storage temperature ts	-20 ... +70 °C
Ambient temperature ta	0 ... +50 °C
Humidity	5 % ... max. 75 % (non-condensing)
Housing material	Housing of PC, base of PPO
Housing colour	Housing RAL 7035, base RAL 7021
Type of protection	IP20
Protection class	II

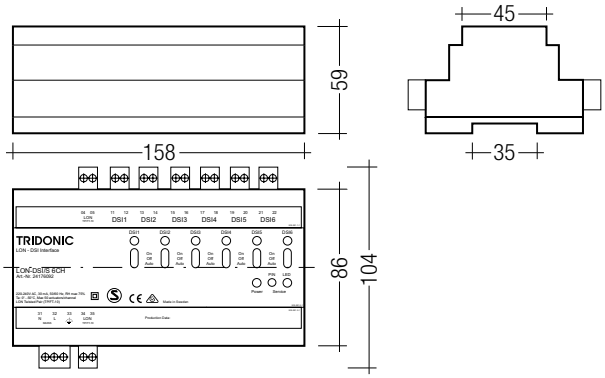

→

Wiring diagrams and installation examples see data sheet

Ordering data

Type	Article number	Packaging, carton	Weight per pc.
LON-DSI/S 6CH	**24176092**	1 pc(s).	0.1 kg

Specific technical data

Type	Inputs	Outputs		
	Dimming / Switching / Reporting	Digital control line DSI	Control output per physical output (devices)	Maximum DSI cable length at 1.5 mm²
LON-DSI/S 6CH	LON (TP/FT-10)	6	50	250 m

CE RoHS

DSI-PCD/S

Leading-edge/trailing-edge phase dimmer 40 – 1,000 VA with preset

Product description

- Digital leading-edge and trailing-edge phase dimmer
- Control via DSI signal or momentary-action switch
- Preset function: storage and retrieval of any lighting value
- With automatic load detection
- For installation in switching cabinets
- Status LED for indicating the operating status
- Not suitable for operation with LED bulbs

→ For product data sheet go to www.tridonic.com, or available on request

Technical data

Rated supply voltage	220 – 240 V
Mains frequency	50 / 60 Hz
Connected load	40 – 1,000 VA
Power loss	2 W (15 W at full load)
Ambient temperature ta	0 ... +40 °C
Type of protection	IP20

→

Wiring diagrams and installation examples see data sheet

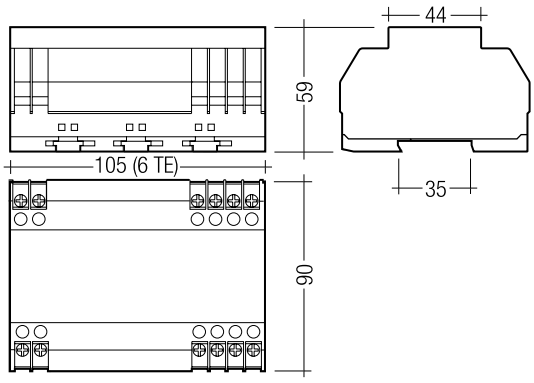

Ordering data

Type	Article number	Packaging, carton	Weight per pc.
DSI-PCD/S	**22154333**	1 pc(s).	0.41 kg

Specific technical data

Type	Inputs			Outputs		Terminals
	Momentary-action switch input for preset retrieval	Single or twin momentary-action switches	DSI control input	Dimmed phase	Control range, output	
DSI-PCD/S	1	1	1	1	0; 1 – 100 %	0.75 – 2.5 mm²

RoHS

DSI-RK

Relay module for switching ohmic loads

Product description

- Relay module
- For switching ohmic loads
- Operation via momentary-action switch (switchDIM) or DSI signal
- Parametrisation (RELAY-ON, RELAY-OFF) via configTOOL software
- Floating switching output
- 5-year guarantee

→ For product data sheet go to www.tridonic.com, or available on request

Technical data

Rated supply voltage	220 – 240 V
Mains frequency	50 / 60 Hz
Ambient temperature ta	0 ... +60 °C
Type of protection	IP20

→

Wiring diagrams and installation examples see data sheet

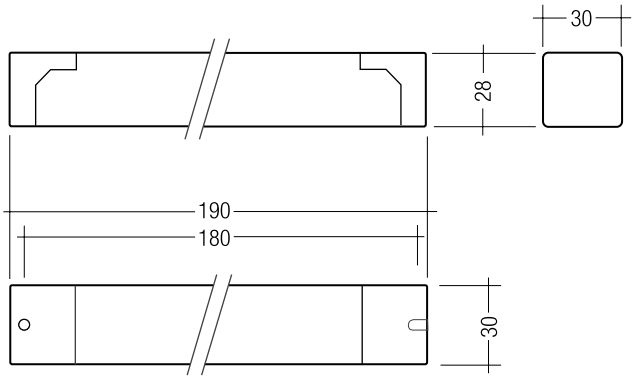

Ordering data

Type	Article number	Packaging, carton	Weight per pc.
DSI-RK	**86449304**	10 pc(s).	0.113 kg

Specific technical data

Type	Input	Output, relay		
		Relay, floating	Switching output (at 110 V DC max.)	Switching output (at 250 V AC max.)
DSI-RK	DSI/switchDIM	Make contact	110 W / 1 A	500 W / 2 A

TRIDONIC's environmental data sheets (EPD)

Tridonic – jointly with the Zumtobel Group's other brands – is the first company in the lighting industry to have introduced Environmental Product Declarations (EPD) in line with ISO 14025 and EN 15804.

By introducing these EPDs, Tridonic complies with designers' and building developers' growing need for transparency. EPDs are especially important when it comes to green building certification, since they provide easy and quick information about how much a luminaire adds to the greenhouse effect, which raw materials were used or how many percent of recycled material it contains.

The environmental impact of a product are analysed early on in the development phase in order to reduce such impact over the product's entire life cycle.

EPDs are available for downloading at the bottom of the product pages on the Tridonic homepage.

Tridonic's first environmental data sheets went online in May 2013.

The EPDs are already available on the Tridonic website (download area at the bottom of the product pages, "EPD" tab). So far, EPDs of all electronic ballasts of the PC and PCA ranges have been made available on the product pages. Environmental product declarations for more LED products and other product areas are in preparation and will be gradually published.

ecolution
An initiative of TRIDONIC

TRIDONIC guarantee conditions

Tridonic stands for high quality products and services. Guarantee for lighting components, management systems, LED-modules and -systems exceeds usual legal guarantee.

Tridonic offers a 5-year guarantee on all devices with a rated life of at least 50,000 hours of operation. A guarantee of 3 years is offered on devices with a rated life of less than 50,000 hours of operation.

Batteries are excluded from this guarantee.

1. Products
This guarantee applies to all electronic control gear supplied by Tridonic (electronic ballasts for fluorescent lamps, electronic ballasts for HID lamps, electronic transformers, emergency units, converters and control units for LED light sources) as well as LED light sources.

2. Duration of the guarantee
The guarantee period for Tridonic products is 3, 5 or 8 years.

2a. Basic guarantee
For products with a physical rated life of ≥ 50,000 hours of operation or more, Tridonic offers a guarantee for a period of 5 years under the following conditions. To ensure that the product guarantee matches the guarantee offered by the luminare manufacturer, the guarantee is extended by a further 6 months from the date of manufacture indicated on the product, up to a maximum of 66 months from the date of manufacture.

This applies to those products for which a rated life of ≥ 50,000 hours of operation is indicated in the data sheets and for all TALEXX LED light sources.

2b. Limited guarantee
For products with a physical rated life of less than 50,000 hours of operation, Tridonic offers a guarantee for a period of 3 years under the following conditions. To ensure that the product guarantee matches the guarantee offered by the luminaire manufacturer, the guarantee is extended by a further 6 months from the date of manufacture indicated on the product, up to a maximum of 42 months from the date of manufacture. This applies to those products for which a rated life of < 50,000 hours of operation is indicated in the data sheets, e.g. PC-R and VIPER.

2c. Extended guarantee for PC INDUSTRY
An extended guarantee of 8 years is offered on the PC INDUSTRY series. This guarantee makes allowance for a 6-month period for dispatch, storage and manu-facture. The maximum guarantee period is therefore 102 months after production.

3. Guarantee conditions
The guarantee offered by Tridonic is valid under the following conditions:

The products from Tridonic must be used in accordance with the relevant product and application specifications. Limit values for temperatures and voltages must not be exceeded and the product not exposed to any mechanical stresses.

The guarantee for electronic operating devices applies only if the product is installed with lamps that comply with the relevant IEC specifications.

The guarantee covers solely product failures caused by material, design or production faults and failure rates that exceed the rated failure rate. The rated life and rated failure rate of a device are considered to be the values defined in the technical documentation.

4. Execution of the guarantee
In the event of failures exceeding the nominal failure rate, Tridonic on its sole discretion might decide to repair defective components or products, supply adequate products as replacement or reimburse products to original customers. The customers or end customers bear the costs for demounting and remounting as well as for sending in and returning products. Any other costs, e.g. replacement costs upon installation, costs caused from failures of the installation or other damage and/or consequential damage are not covered by this guarantee.

The indicated lifetime is achieved by operating lighting components according to the conditions specified by the manufacturers, to the relevant international standards and in accordance with local regulations. All electronic products having an expected failure rate require continuous monitoring, which must be documented in writing.

In view of the statistical failure rate of electronic products, installations with electronic operating devices and LED light sources require regular maintenance. The products must therefore be easy to access at all times. When installing the products, the requirements of easy maintenance must therefore be taken into consideration to keep maintenance costs down.

If simple replacement is not carried out in good time, the end customer must be informed of the additional costs that may arise in connection with standard maintenance. In designing and installing luminaires, it should be remembered that the controller, ballast and/or LED light source may have to be replaced before the luminaire comes to the end of its life.

Additional Information for LED modules
The guarantee conditions relate exclusively to mortality beyond the nominal failure rate. In view of technical advances and the changes in the luminous flux of products depending on their usage there may be differences in the photometric properties between replacement or additional LED modules and the original products.

5. Utilisation of the Guarantee
The guarantee has to be claimed immediately by returning the defective product in order to check the validity of the claim.

6. Applicable Law
See the conditions supplied with the invoice.

TRIDONIC sales organisation

AUSTRALIA
Tridonic Australia Pty Ltd
P.O. Box 120
Unit F1 Palm Grove Business Park
13 - 15 Forrester Street
2208 Kingsgrove
Australia
T: +61 2 9503 0800
F: +61 2 9503 0888
enquiries@tridonic.com.au
www.tridonic.com

Tridonic Australia Pty Ltd
Private Bag No. 9
130 Melrose Drive,
3043 Tullamarine, Victoria
Australia
T: +61 3 9339 0200
F: +61 3 9330 3595
enquiries@tridonic.com.au
www.tridonic.com

AUSTRIA
Tridonic GmbH & Co KG
Head Office
Färbergasse 15
6851 Dornbirn
Österreich
T: +43 5572 395-0
F: +43 5572 20176
sales@tridonic.com
www.tridonic.com

Tridonic connection technology
GmbH & Co KG
Archenweg 58
6020 Innsbruck
Österreich
T: +43 512 3321
F: +43 512 3321-81
office@tridonic-ct.com
www.tridonic-ct.com

Tridonic GmbH & Co KG
Vertrieb Österreich
Archenweg 58
6022 Innsbruck
Österreich
T: +43 512 3321-554
F: +43 512 3321-995554
vertrieb.austria@tridonic.com
www.tridonic.com

e-term Handels GmbH
Feldstrasse 11
6020 Innsbruck
Österreich
T: +43 (0) 59590
F: +43 (0) 59590-59
welcome@e-term.at
www.e-term.at

BAHRAIN
Tridonic Middle East (FZE)
P.O. Box 17972
Jebel Ali Free Zone
Dubai
United Arab Emirates
T: +971 4 8833664
F: +971 4 8833665
sales.middleeast@tridonic.com
www.tridonic.com

BELARUS
Beltrade Sp. Z.o.o.
Ul. Nekrasova 114
220068 Minsk
Belarus
T: +375 29 3738050
F: +375 29 2878018
info@beltrade.pl
www.beltrade.pl

Objedinenie Sveta LLC
Borovaya, 1
ZAO „Vystovochny Center Akvabel“,
Room 6
223053 Minskiy rayon
Belarus
T: +375 29 3460950
F: +375 29 2379401
yuri.galuta@gmail.com
www.svetilkin.by

BELGIUM
Tridonic
Bureau de vente Belgique
Rue Gaston Bary 39
1310 La Hulpe
Belgium
T: +32 2 652 1964
F: +32 2 652 0718
pauwels.tridonic@skynet.be
www.tridonic.com

BRAZIL (for TALEXX LED solutions)
VinilSul-PR
End. Rua Brasílio Itiberê, nº 2210 B Lj 1
Reboucas – Curitiba – PR
80230-050 Curitiba – PR
Brazil
T: +55 41 3207 0800
curitiba@vinilsul.com.br
www.vinilsul.com.br

VinilSul-SC
End. Rua João Ambrosio da Silva, 176
Ipiranga – Florianópolis – SC
88111-550 Florianópolis – SC
Brazil
T: +55 48 3047 2147
eliane@vinilsul.com.br
www.vinilsul.com.br

VinilSul-GO
End. Avenida Juscelino Kubitscheck,
Quadra 10 Lote 7/8/29/30
Vila Maria – Aparecida de Goiânia – GO
74215-210 Goiânia – GO
Brazil
T: +55 62 3878 0800
goiania@vinilsul.com.br
www.vinilsul.com.br

VinilSul-RS
End. Avenida França, 504
Navegantes – Porto Alegre – RS
90230-220 Porto Alegre – RS
Brazil
T: +55 51 3275 0800
portoalegre@vinilsul.com.br
www.vinilsul.com.br

VinilSul-PE
End. Rua Professor Aloísio Pessoa de
Araujo,
80 Sl 301
Boa Viagem – Recife – PE
51021-410 Recife – PE
Brazil
T: +55 81 3034 5030
michelle@vinilsul.com.br
www.vinilsul.com.br

VinilSul-RJ
End. Rua Barros Barretos, 35
Bonsucesso – Rio de Janeiro – RJ
21032-140 Rio de Janeiro – RJ
Brazil
T: +55 21 3622 0800
riodejaneiro@vinilsul.com.br
www.vinilsul.com.br

VinilSul-SP
End. Rua Ourinhos, no 401
Mooca – São Paulo – SP
03186-040 São Paulo – SP
Brazil
T: +55 11 2084 4404
saopaulo@vinilsul.com.br
www.vinilsul.com.br

BULGARIA
ROS
Rossiza Dontscheva
Topolniza 1
1510 Sofia
Bulgaria
T: +359 2 943 42 32
F: +359 2 945 73 62
office@ros-bg.com
www.ros-bg.com

CHILE
Artelamp Ltda.
San Ignacio 551
Quilicura, Santiago
Chile
T: +56 2 7335545
jbenitez@artelamp.cl
www.artelamp.cl

CHINA
Tridonic (Shanghai) Co., Ltd.
Beijing Branch
Rm 516, West Wing, North Hall
Junefield Plaza
No.6 Xuanwumenwai Street
100052 Beijing
China
T: +86 10 65226163
F: +86 10 65227003
china@tridonic.com
www.tridonic.com

Tridonic (Shanghai) Co., Ltd.
Guangzhou Branch
Room 505, R&F Profit Plaza
76 Huangpu Xi Road, Tianhe District
510623 Guangzhou
China
T: +86 20 38392483
F: +86 20 38392482
china@tridonic.com
www.tridonic.com

Tridonic (Shanghai) Co., Ltd.
(Headquarters)
Building 3, 799 West Tianshan Road
200335 Shanghai
China
T: +86 21 52400599
F: +86 21 52400230
china@tridonic.com
www.tridonic.com

CROATIA
Dobrna 7
3204 Dobrna
Slovenia
T: +386 3 7801070
F: +386 3 7801078
info@ett-lighting.com
www.ett-lighting.com

CZECH REPUBLIC
SCHÄFER & SYKORA spol.s.r.o.
Cihlarska 1000/2
40801 Rumburk
Czech Republic
T: +420 412 354 931
F: +420 412 354 945
svetlo@sasa.cz
www.sasa.cz

DENMARK
as Electrotrading
Danmark
Postboks 333
Skiveien 6
1411 Kolbotn, Norway
Denmark
T: +47 6681 7330
F: +47 6681 7333
jan-erik@electrotrading.no
www.tridonic.com

EGYPT
Tridonic Middle East (FZE)
P.O. Box 17972
Jebel Ali Free Zone
Dubai
United Arab Emirates
T: +971 4 8833664
F: +971 4 8833665
sales.middleeast@tridonic.com
www.tridonic.com

ESTONIA
Wennerström Ljuskontroll AB
Estonia
Källdalen
64591 Strängnäs, Sweden
T: +46 152 91000
F: +46 152 91078
myyk@ljuskontroll.com
www.ljuskontroll.com

FINLAND
Wennerström Ljuskontroll AB
Finland
Källdalen
64591 Strängnäs, Sweden
T: +358 9 6223856
F: +358 2 7353761
myynti@ljuskontroll.com
www.ljuskontroll.com

FRANCE
Tridonic France Sarl
34 Rue de l'Expansion
67150 Erstein Gare
France
T: +33 3 88 59 62 70
F: +33 3 88 59 62 75
info.france@tridonic.com
www.tridonic.com

GERMANY
Tridonic Deutschland GmbH
Edisonallee 1
89231 Neu-Ulm
Deutschland
T: +49 731 176629-0
F: +49 731 176629-15
vertrieb.deutschland@tridonic.com
www.tridonic.de

GREECE
SUBRO
Kiourtsidis Ant. Nikolaos
Ioannou Alexiou 22 Chalkida
34100 Attica
Greece
T: +30 2221 112378
F: +30 2221 112378
nkiourtsidis@suppliersbro.com
sales@suppliersbro.com

HONG KONG
TridonicAtco Hong Kong Limited
Room 709-710, Tower 1, Silvercord
30 Canton Road, Tsim Sha Tsui
Hong Kong
T: +852 3966 2714
F: +852 3966 2715
hongkong@tridonic.com
www.tridonic.com

HUNGARY
HOLUX Co. Ltd
Lighting Systems
Béké út. 51-55
1135 Budapest
Hungary
T: +36 1 4502700
F: +36 1 4502710
hoso@holux.hu
www.holux.hu

INDIA
Atco Controls (India) Pvt. Ltd.
38B Nariman Bhavan,
Nariman Point
400 021 Mumbai
India
T: +91 22 2202 5528
F: +91 22 2202 2304
sales@atcocontrols.com
www.tridonic.co.in

INDONESIA
P.T. Sahabat Indonesia
Jl Muara Karang Selatan Block A, Utara 1
Kawasan Industri Pergudangan
14440 Jakarta – Utara
Indonesia
T: +62 21 661 0651, 662 1780
F: +62 21 660 3700
sahabat@uninet.net.id
www.tridonic.com

IRAN (ISLAMIC REPUBLIC OF)
Miran Noor Gostar
15, Kolahdooz St., Tehran
19586-15515
Iran
T: +98 21 22553400
F: +98 21 22553406
mirali@mirannoor.com
www.mirannoor.com

IRAQ
DuLight FZE
P.O.Box 262685
RA07AD08 - LIU15 Jebel Ali Free Zone
Dubai - UAE
T: +971 4 8808115
F: +971 4 8808125
admin@dulights.com
www.tridonic.com

ISRAEL
Conel
Hayahalom Industrial Park
P.O. Box 172
Bareket 73185
Israel
T: +972 72 242 0222
F: +972 72 242 0220
info@conel.co.il

ITALY
Tridonic Italia srl
Viale della Navigazione
Interna, 115
35027 Noventa Padovana
Italy
T: +39 049 89 45 127
F: +39 049 87 04 715
vendite.italia@tridonic.com
www.tridonic.it

Sicom Spa
Via Lussemburgo, 10-12
35127 Padova-Zona Ind.
Italy
T: +39 049 8701470
F: +39 049 8700738
sicom@sicom-pd.it
www.sicom-pd.it

JORDAN
Tridonic Middle East (FZE)
P.O. Box 17972
Jebel Ali Free Zone
Dubai
United Arab Emirates
T: +971 4 8833664
F: +971 4 8833665
sales.middleeast@tridonic.com
www.tridonic.com

KOREA (SOUTH) – REPUBLIC OF
Star Marine
3F, Sujeong-Dong, Dong-Gu
#248-20 Busan
Republic of Korea (South)
T: +82 51 265 5203
starmarine@korea.com
www.tridonic.com

KUWAIT
Tridonic Middle East (FZE)
P.O. Box 17972
Jebel Ali Free Zone
Dubai
United Arab Emirates
T: +971 4 8833664
F: +971 4 8833665
sales.middleeast@tridonic.com
www.tridonic.com

LATVIA
Wennerström Ljuskontroll AB
Källdalen
645 91 Strängnäs, Sweden
T: +46 152 91000
F: +46 152 91078
sales@ljuskontroll.com
www.ljuskontroll.com

LEBANON
Tabet Engineering & Lighting Co.
P.O. Box 11-8402
1st Floor Asfar Bldg. Al Arz St. Saifi
70278 Beirut
Lebanon
T: +961 1 564445
F: +961 1 564647
info@tabet-engineering.com
www.tridonic.com

LITHUANIA
Wennerström Ljuskontroll AB
Källdalen
645 91 Strängnäs, Sweden
T: +46 152 91000
F: +46 152 91078
sales@ljuskontroll.com
www.ljuskontroll.com

MALAYSIA
Tridonic S.E.A. Pte Ltd
10 Tannery Lane
#03-01
347773 Singapore
Malaysia
T: +65 62928148
F: +65 62933700
asean@tridonic.com
www.tridonic.com

MOLDAVIA (REPUBLIC OF)
ELECTRO SERVICE
Bulgara, 9
2001 Chisinau
Republic of Moldavia
es@es.mldnet.com

NETHERLANDS
Elpro b.v.
Pascalstraat 3-I
2811 El Reeuwijk
Netherlands
T: +31 182 533633
F: +31 182 570414
info@elpro.nl
www.elpro.nl

NEW ZEALAND
Tridonic New Zealand Ltd
Airport Oaks Mangere
PO Box 107044
9 Aintree Ave
New Zealand
T: +64 9256 2310
F: +64 9256 0109
sales@tridonic.co.nz
www.tridonic.com

NORWAY
as Electrotrading
Skiveien 6
Postboks 333
1411 Kolbotn
Norway
T: +47 6681 7330
F: +47 6681 7333
jan-erik@electrotrading.no
www.tridonic.com

OMAN
Tridonic Middle East (FZE)
P.O. Box 17972
Jebel Ali Free Zone
Dubai
United Arab Emirates
T: +971 4 8833664
F: +971 4 8833665
sales.middleeast@tridonic.com
www.tridonic.com

PAKISTAN
Tridonic Middle East (FZE)
P.O. Box 17972
Jebel Ali Free Zone
Dubai
United Arab Emirates
T: +971 4 8833664
F: +971 4 8833665
sales.middleeast@tridonic.com
www.tridonic.com

PERU
Ohmlux S.A.C.
Los Geranios 185
Urb. Valdivieso, Ate, Lima
Peru
T: +51 1 326-1836
F: +51 1 326-0095
gmartinez@ohmlux.com.pe
www.ohmlux.com.pe

PHILIPPINES
Fumaco Inc.
420, Ortigas Avenue Corner
Xavier Street
Greenhills, San Juan City
Philippines
T: +63 2 721 0326-66
F: +63 2 721 0361
sales@fumaco.com
www.tridonic.com

POLAND
Tridonic Rep. Office Poland
T: +48 67 222 60 07
F: +48 67 222 60 07
marek.michalski@tridonic.com
www.tridonic.com

NARVA Polska Sp. z o.o.
ul. Prosta 69
00-838 Warszawa
Poland
T: +48 22 444 1960
F: +48 22 444 1961
biuro@narva.com.pl
www.narva.com.pl

PORTUGAL
Tridonic
Product Promotion Office
Rua Tomás da Fonseca
Torre G, 1° Piso
1600-209 Lisboa
Portugal
T: +351 21 723 06 96
F: +351 21 723 06 75
rui.madrugo@tridonic.com
www.tridonic.com

QATAR
Tridonic Middle East (FZE)
P.O. Box 17972
Jebel Ali Free Zone
Dubai
United Arab Emirates
T: +971 4 8833664
F: +971 4 8833665
sales.middleeast@tridonic.com
www.tridonic.com

RUSSIAN FEDERATION
Tridonic Rep. Office Russia
T: +7 916 210 9156
michael.ekassov@tridonic.com
www.tridonic.com

Tochka Opory Promelectrosvet
Fakultetskiy Lane 12
RUS-125080 Moscow
T: +7 499 158 2461
F: +7 499 626 9796
tochka@msk-k-to.ru
www.k-to.ru

Eco Service
Ivana Franko str 6
RUS-121108 Moscow
T: +7 495 775 75 47
F: +7 495 775 75 47
info@lampa.ru

First Mile
Ul. Butlerova, 17
RUS-117638 Moscow
T: +7 495 960-31-59
F: +7 495 960-31-59
info@firstmile.ru
www.firstmile.ru

SAUDI ARABIA
Tridonic Middle East (FZE)
P.O. Box 17972
Jebel Ali Free Zone
Dubai
United Arab Emirates
T: +971 4 8833664
F: +971 4 8833665
sales.middleeast@tridonic.com
www.tridonic.com

SINGAPORE
Tridonic S.E.A. Pte Ltd
10 Tannery Lane
#03-01
347773 Singapore
T: +65 6292 8148
F: +65 6293 3700
asean@tridonic.com
www.tridonic.com

Lumitron Pte Ltd
103 Kaki Bukit Avenue 1,
Shun Li Industrial Park,
415986 Singapore
T: +65 68462288
F: +65 68462289
lumitron@pacific.net.sg
www.tridonic.com

SLOVAKIA
SCHÄFER & SYKORA spol.s.r.o.
Cihlarska 1000/2
40801 Rumburk
Czech Republic
T: +420 412 354 931
F: +420 412 354 945
svetlo@sasa.cz
www.sasa.cz

SLOVENIA
ETT Lighting d.o.o.
Dobrna 7
3204 Dobrna
Slovenia
T: +386 3 7801070
F: +386 3 7801078
info@ett-lighting.com
www.ett-lighting.com

SOUTH AFRICA
Tridonic SA (Pty) Ltd T/A
53-57 Yaldwyn Road, Hughes Extension,
Jet Park, 1459
P. O. Box 30542
1459 Johannesburg
South Africa
T: +27 11 9239686
F: +27 11 9239684
info@tridonic.co.za
www.tridonic.co.za

SPAIN
Tridonic Iberia, S.L.
Oficina Central – Madrid
Calle Carpinteros nº 8, 2a
Poligono Industrial Pinares Llanos
28670 Villaviciosa de Odón (Madrid)
Espagne
T: +34 916 162 095
F: +34 916 165 695
ventas@tridonic.com
www.tridonic.es

Tridonic Iberia, S.L.
Delegación – Barcelona
Calle Pau Vila nº 13-15, 3ª
Polígono IV del Plan Especial
de Ordenación San Mamet
08173 Sant Cugat del Valles (Barcelona)
Espagne
T: +34 935 878 628
F: +34 935 903 297

SRI LANKA
GENERAL SALES Co., Ltd.
Senanayake Building,
No. 7, Station Road,
Sri Lanka
T: +94 1 574 511
F: +94 1 573 673
gescoms@mail.ewisl.net
www.tridonic.com

SWEDEN
Wennerström Ljuskontroll AB
Källdalen
645 91 Strängnäs, Sweden
T: +46 152 91000
F: +46 152 91078
info@ljuskontroll.com
www.ljuskontroll.com

SWITZERLAND
Tridonic AG
Obere Allmeind 2
8755 Ennenda
Schweiz
T: +41 55 6454747
F: +41 55 6454700
vertrieb.schweiz@tridonic.com
www.tridonic.ch

SYRIAN ARAB REPUBLIC
Tridonic Middle East (FZE)
P.O. Box 17972
Jebel Ali Free Zone
Dubai
United Arab Emirates
T: +971 4 8833664
F: +971 4 8833665
sales.middleeast@tridonic.com
www.tridonic.com

TAIWAN
BJB Electric Taiwan Corporation
Tridonic Sole Agent Taiwan
4/F, No. 108 Chow-Tze Street
Nei-Hu District (114), Taipei city
Taiwan
T: +886 2 26277722
F: +886 2 26271122
sales-Taiwan@bjb.com
www.tridonic.com

THAILAND
Electronic Lighting Co. Ltd
55/52 Moo 2, Soi Paris
Kampangphet, Lad-yao
Thailand
T: +66 2521 6091-5
F: +66 2521 6096
chalerm.b@elightingthailand.com

TURKEY
Tridonic Aydınlatma Tic.Ltd. Şti.
Kemankeş Mah., Necatibey cad.
Akçe Sok., Akçe Han No: 10
34420 Karaköy/Beyoğlu İSTANBUL
Turkey
T: +90 212 244 78 05
F: +90 212 244 78 06
satis@tridonic.com
www.tridonic.com

UKRAINE
Power of Light
Magnitogorskaya, 1
02660 Kiev
Ukraine
www.sila-sveta.com.ua

Queensland
Bazhana, 10
02140 Kiev
Ukraine
www.qld.com.ua

Edisson
Ekaterininskaya, 33
65045 Odessa
Ukraine
www.edisson.ua

UNITED ARAB EMIRATES
Tridonic Middle East (FZE)
P.O. Box 17972
Jebel Ali Free Zone
Dubai
United Arab Emirates
T: +971 4 8833664
F: +971 4 8833665
sales.middleeast@tridonic.com
www.tridonic.com

UNITED KINGDOM
Tridonic UK Ltd
7 Lindenwood
Chineham Business Park
Crockford Lane, Chineham
RG24 8LB Basingstoke
United Kingdom
T: +44 1256 374300
F: +44 1256 374200
enquiries@uk.tridonic.co.at
www.tridonic.com

UNITED STATES
TRIDONIC Inc.
1305 Lakes Parkway Suite 101
GA 30043 Lawrenceville
United States
T: +1 678 382 6320
F: +1 678 382 6322
guido.walther@tridonic.us
www.tridonic.us

URUGUAY
LYTE Iluminación Técnica
Isla de Flores 1858 esq. Frugoni
Montevideo
Uruguay
T: +598 2 4101632/34
F: +598 2 4101632/34
lyte@lyte.com.uy
www.lyte.com.uy

VIETNAM
Nien Loi Import Export
Trading Service Corporation
Cach Mang Thang Tam St., Ward 11.
686 / 72 / 23
Dist. 3. Ho Chi Minh City
Vietnam
T: +84 8 39934314
F: +84 8 39934315
nienloicorp@vnn.vn
www.tridonic.com

Approval marks and symbols

Tridonic products comply with the requirements of 2004/108/EC and 2006/95/EC, and are entitled to bear the CE mark. EC declarations of conformity can be requested via the internet at www.tridonic.com, menu “Technical data”.

RoHS

RoHS (Restriction of the use of certain Hazardous Substances in electrical and electronic equipment) summarises EU directive 2002/95/EC on the prohibition of certain substances in the manufacture and processing of electrical and electronic equipment and components.

The ENEC mark (European Norms Electrical Certification) is a European mark of conformity and confirms that the device on which the symbol is shown complies with all the requirements of the ENEC scheme. Test certificates can be requested via the Internet at www.tridonic.com, menu “Technical data”.

National Safety approval marks, partly incl. other standards

VDE EMC approval mark

Protection class II device in which protection against electric shock is not based solely on the basic insulation but in which there are additional safety features such as double or enhanced insulation. It is independent of the protection measures of the fixed installation.

Reinforced insulation. The device is designed to be used in class II equipments and does not need any protection earth.

Mark for an independent gear. The gear must not be mounted inside the luminaire.

M M

The device is suitable for installing on or in furniture which is made from materials with unknown flammability properties.

90 100 110 120 130

Pictogram for temperature-protected devices. The temperature shown is the maximum surface temperature in the event of a fault at rated ambient temperature.

SELV

Safety Extra-Low-voltage

Short-circuit-proof safety converter / non-short-circuit-proof safety converter.

ESD protection necessary

DALI

DALI is an acronym and stands for “Digital Addressable Lighting Interface“ set out in the technical standard IEC 62386 that guarantees the exchangeability of dimmable ballasts. Under the auspices of the German Central Association of the Industry for Electric and Electronic Products (registered committee: ZVEI) the AG DALI (Activity Group DALI – an open group with leading manufacturers of control devices) was founded to establish this standard in the market.

The latest technical information including all the mechanical and electrical details can be downloaded from the internet:
at www.tridonic.com, menu “Technical data”, submenu “Data sheets”

Standards

EN 61347-1	IEC 61347-1	General and safety requirements for lamp control gear
EN 61347-2-11	IEC 61347-2-11	Particular requirements for electronic modules for luminaires
EN 61347-2-13	IEC 61347-2-13	Particular requirements for electronic control gear for LED modules
EN 62031	IEC 62031	Safety specifications for LED modules
EN 60598-1	IEC 60598-1	General requirements for luminaires
EN 60598-2-1	IEC 60598-2-1	Particular requirements for fixed general purpose luminaires
EN 60598-2-22	IEC 60598-2-22	Particular requirements in respect of luminaires for emergency lighting
EN 62493	IEC 62493	Assessment of lighting equipment related to human exposure to electro-magnetic fields
EN 62471	IEC 62471	Photobiological safety of lamps and lamp systems
EN 55015	CISPR 15	Radio disturbances
EN 61547	IEC 61547	EMC immunity requirements
EN 61000-3-2	IEC 61000-3-2	Harmonic current emissions
EN 61000-3-3	IEC 61000-3-3	Voltage fluctuations and flicker in low-voltage supply systems
EN 62384	IEC 62384	DC or AC supplied electronic control gear for LED modules – performance requirements
EN 62386	IEC 62386	Digital addressable lighting interface
EN 50172		Requirements for emergency escape lighting systems
acc. to VDE 0108 / EN 50172		Suitable for emergency lighting installations
EN 62034	IEC 62034	Automatic test system for battery-powered emergency escape lighting
EN 60068-2-64 Fh	IEC 60068-2-64 Fh	Environmental testing – test Fh: Vibration, broad-band random (digital control)
EN 60068-2-27 Ea	IEC 60068-2-27 Ea	Environmental testing – test Ea and guidance: Shock
EN 60068-2-30 Db	IEC 60068-2-30 Db	Basic environmental testing procedures – test Db: Damp heat, cyclic (12+12-hour cycle)

TRIDONIC
enlightening your ideas

Go to www.tridonic.com to find your personal contact at Tridonic.

Further information and ordering data:

TALEXX-LED-Leaflet available at www.tridonic.com, “Services” menu

Data sheets available at www.tridonic.com, “Technical data” menu

Certificates at www.tridonic.com, “Technical data” menu

Latest product data at www.tridonic.com, “Products” menu (EN)

Effective 10/13
Subject to change without notice.